FULL VERSION MANUAL

70P

Art.no 34990-9011 (MN), 34990-9013 (ME), 34990-9015 (MS)

SILVA MARINE COMPASS 70P

A bulkhead mount compass designed for yachtsmen that demand absolute accuracy and a steady card in all conditions. 70P handles unlimited slope of the keel line and a 30° heeling angle. The curved lubber line enables swift and clear reading at a glance without parallax errors. With a main steering scale on the horizontal part and direct reading on the vertical edge, 70P is ideal for boats with a sitting as well as a standing helmsman.
70P can be mounted at most angles and is suitable for smaller boats due to its compact size (70 mm) .

PRODUCT OVERVIEW

- For permanent flush mounting - vertical or at sloping angle
- Compensator can be supplied as an optional extra
- Illumination can be supplied as an optional extra
- Permits transverse tilting up to 30°, unlimited tilting fore and aft
- Double scale-top and edge readings
- Suitable for all kinds of boats, including fast motor boats and kayaks

The packaging includes:

- Compass unit
- Mounting kit

ILLUMINATION

This compass can be supplied with illumination 12 V.
Adaptation to 24V-illumination connected in series by a resistor of 270 ohm, 0.5 W.

POSITIONING

SILVA 70P has many different possibilities of positioning - vertically, horizontally or sloping

UNIVERSAL MOUNT

The compass should be positioned where it can be easily read from all angles. Position the compass as far as possible away from iron objects or other disturbing magnetic sources as loud speakers, windscreen wipers, instruments etc.
NB! SILVAs electronic instruments do not disturb the compass.
When checking for magnetic disturbance, use an ordinary SILVA handheld compass, held in the fore-and-aft direction around the intended mounting site. In most cases 0.5 to 1 metre between the compass and the source of disturbance will be sufficient. Do not forget to switch on all electrical equipment near the compass when making this check.

MOUNTING

See that the compass is mounted with its lubber lines exactly along the boat's longitudinal line or parallel to it. The compass requires a mounting depth of atleast 40 mm for 70P and 55 mm for type 100P/PT. Otherwise the compass' expansion membrane will be compressed, which can lead to leakage.
NB! If other types of fastening screws are used, these must be of non-magnetic material. Refer to the template for fitting dimensions.

COMPENSATION AND DEVIATION

Compensation is recommended, if the deviation is more than 5 degrees, when the compass is in its normal mounting position.

If the error is less than 5 degrees, it is sufficient to produce a deviation table.
Adjust by using a compensator (optional extra) and eliminate or at least reduce the errors that iron or other sources of magnetic disturbance may have on the compass.

When compensating, the boat should be in an area that is not affected by permanent- or electromagnetic disturbances.

1. Aim the boat due North and turn the "N/S" screw until the compass reading is 0°.
2. Aim the boat due East and turn the "E/W" screw until the compass reading is 90°.
3. Aim the boat due South. If the compass does not show 180°, turn the "N/S" screw until the error is halved. (E.g. If the error is 6° - turn the screw until the error is 3 °.)
4. Aim the boat due West. If the compass does not show 270°, turn the screw until the error is halved.
5. Go through the procedure again and check the adjusted values.
6. Check the compass every 20 degrees and produce a deviation table and deviation curve.

As the magnetic conditions in a boat are liable to change, we recommend checking of the compass once a year and always after installation of equipment which might affect the compass.

NB! Do not regard the compass as an accurate navigational instrument until the compensation is carried out and the deviation table is produced. Whenever in doubt, please seek the advice of a compass adjuster!

MAINTENANCE

To clean the compass, use a mild soap solution or detergent. Do not use strong solvents, such as spirit, acetone or petroleum.
The compass tolerates temperatures down to -30°C. It is advisable not to subject it to severe cold for long periods.

TECHNICAL SPECIFICATIONS

Type of compass: Sailboat- / Power boat- / Kayak- compass
Illumination: Optional
Lubber lines: Centre (front, back)
Gimballed cradle: No
Accuracy: ±1°
Apparent card diameter: 70 mm.
Compensator: Optional
Card type: Cone
Card graduation: Edge: every 5° Top: every 5°
Heeling angle: Roll: 30° Pitch: 30°
Heeling angle scale: No
Mounting: Bulkhead
Mounting angle: +10° to +110°
Temp operating range: -10°C to +70°C
Adjustable cover: No
Material: Acrylic/ABS
Weight: 344 g
Dimensions:

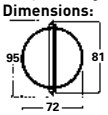

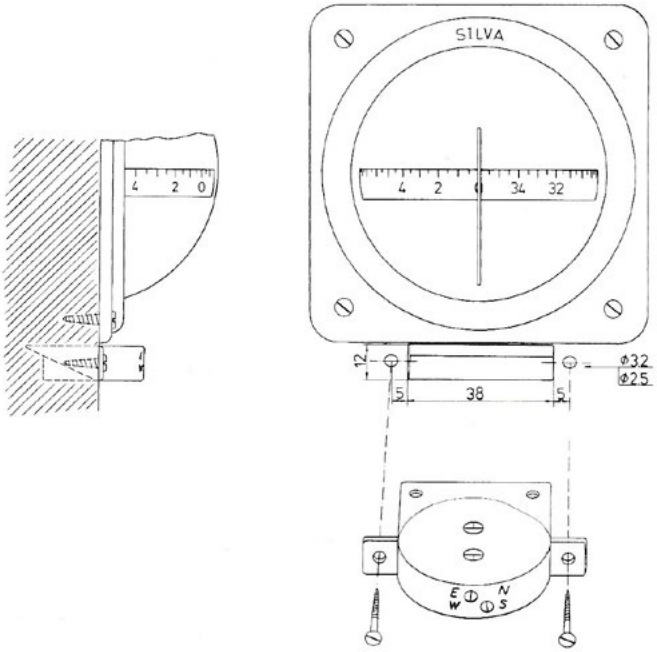

PROTECT THE ENVIRONMENT.

The Compasses should be recycled and must not be thrown in the regular trash.
Dispose these items in accordance with applicable local regulations.

For more information please visit **www.silva.se**

Visit: **www.silva.se**
for more information about the Waste Electrical and Electronic Equipment (WEEE) Directive.