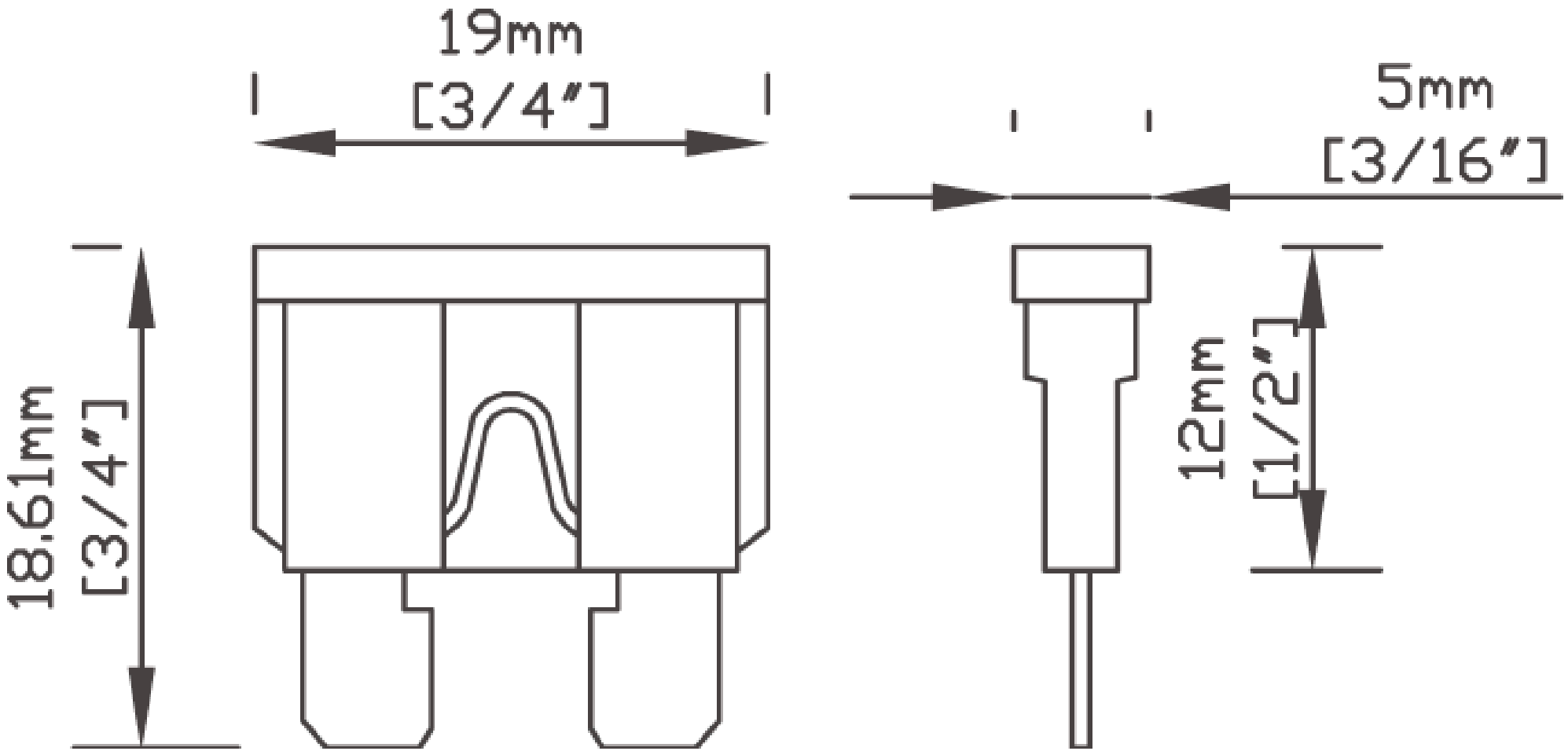
19mm
[3/4"]
5mm
[3/16"]
18.61mm
[3/4"]
12mm
[1/2"]