MERCURY
MerCruiser

SERVICE MANUAL

Number 29

D1.7L DTI
(0M055001 & ABOVE)

Printed in U.S.A.

90-863016 MARCH 2001

Notice

Throughout this publication, Dangers, Warnings and Cautions (accompanied by the International HAZARD Symbol ⚠) are used to alert the mechanic to special instructions concerning a particular service or operation that may be hazardous if performed incorrectly or carelessly. **OBSERVE THEM CAREFULLY!**

These Safety Alerts alone cannot eliminate the hazards that they signal. Strict compliance to these special instructions when performing the service, plus Common Sense operation, are major accident prevention measures.

⚠ DANGER
Immediate hazards which WILL result in severe personal injury or death.

⚠ WARNING
Hazards or unsafe practices which COULD result in severe personal injury or death.

⚠ CAUTION
Hazards or unsafe practices which COULD result in minor personal injury or product or property damage.

Notice to Users of This Manual

This service manual has been written and published by Mercury Marine to aid our dealers, mechanics and company service personnel when servicing the products described herein. We assume that these personnel have been trained in and are familiar with the recommended servicing procedures of these products or like or similar products manufactured and marketed by Mercury Marine. Training includes the use of mechanic's common hand tools and the special marine tools.

We could not possibly know of and advise the service trade of all conceivable service procedures and of the possible hazards and/or results of each method. We have not undertaken any such wide evaluation. Therefore, anyone who uses a service procedure and/or tool, which is not recommended by the manufacturer, first must be completely satisfied that neither their own nor the product's safety will be endangered.

The electrical system is capable of violent and damaging short circuits or severe electrical shocks. When performing any work where electrical terminals could possibly be grounded or touched by the mechanic, the battery cables should be disconnected at the battery.

Any time the intake or exhaust openings are exposed they should be covered to prevent foreign material from entering the cylinders and damaging the engine.

Replacement fasteners must have the same measurements and strength as those removed. Numbers on the heads of the metric bolts and on surfaces of metric nuts indicate their strength. Customary bolts use radial lines for this purpose, while most customary nuts do not have strength markings. Mismatched or incorrect fasteners can result in damage, malfunction or possible personal injury. Therefore, fasteners removed should be saved for re-use in the same locations whenever possible. Where the fasteners are not satisfactory for re-use, care should be taken to select a replacement that meets the same specifications as the original.

All information, illustrations and specifications contained in this manual are based on the latest product information available at time of publication.

We reserve the right to make changes to this manual without prior notification.

Engine Mechanical Components

Many of the engine mechanical components are designed for marine applications. Unlike automotive engines, marine engines are subjected to extended periods of heavy load and wide open throttle operation and, therefore, require heavy-duty components. Special marine engine parts have design and manufacturing specifications that are required to provide long life and dependable performance. Marine engine parts also must be able to resist the corrosive action of salt or brackish water that will rust or corrode standard automotive parts within a short period of time.

Replacement Parts

Failure to use recommended Quicksilver service replacement parts can result in poor engine performance and/or durability, rapid corrosion of parts subjected to salt water and possibly complete failure of the engine.

Use of parts other than recommended service replacement parts will void the warranty on those parts which are damaged as a result of the use of other than recommended replacement parts.

⚠ WARNING

Electrical and fuel system components on Mercury MerCruiser Engines and Sterndrives are designed and manufactured to comply with U.S. Coast Guard Rules and Regulations to minimize risks of fire or explosion.

Use of replacement electrical or fuel system components that do not comply to these rules and regulations could result in a fire or explosion hazard and should be avoided.

When servicing the electrical and fuel systems it is extremely important that all components are properly installed and tightened. If not, any electrical component opening would permit sparks to ignite fuel vapors from fuel system leaks if they existed.

Models Covered in This Manual

MCM Model	Serial Number
D1.7L DTI	OM055001 and Above

NOTICE
Refer to appropriate Sterndrive Service Manual for transom assembly and sterndrive unit repair.

Service Manual Outline

IMPORTANT INFORMATION

Section 1A - General Information

Section 1B - Maintenance

Section 1C - Troubleshooting

REMOVAL AND INSTALLATION

Section 2A - MCM (Sterndrive) Models

ENGINE

Section 3A-D1.7L DTI Engine Mechanical

ELECTRICAL SYSTEM

Section 4A - Starting System

Section 4B - Charging System

Section 4C - Glow Plug System (If Equipped)

Section 4D - Instrumentation

Section 4E - Wiring Diagrams

FUEL SYSTEM

Section 5A - Fuel Filter

Section 5B - Fuel Injectors

Section 5C - Injection Pump

COOLING SYSTEM

Section 6A - Closed Cooling

INTAKE AND EXHAUST SYSTEM

Section 7A - Intercooler

Section 7B - Exhaust

Section 7C - Turbocharger

POWER STEERING

Section 8A

IMPORTANT INFORMATION

Section 1A - General Information

Table of Contents

THIS PAGE IS INTENTIONALLY BLANK

Introduction

This comprehensive overhaul and repair manual is designed as a service guide for the models previously listed. It provides specific information, including procedures for disassembly, inspection, assembly and adjustment to enable dealers and service mechanics to repair and tune these engines.

Before attempting repairs or tune-up, it is suggested that the procedure first be read through to gain knowledge of the methods and tools used and the cautions and warnings required for safety.

How to Use This Manual

This manual is divided into sections which represent major components and systems. Some sections are further divided into parts which more fully describe the component. Sections and section parts are listed on the Service Manual Outline page following the Models Covered in This Manual, page iv.

Page Numbering

Two number groups appear at the bottom of each page. Following is an example and description.

a - Section Number
b - Section Part
c - Page Number
d - Manual Number
e - Revision Number 4
f - Month Printed
g - Year Printed

Engine Serial Number / Decal Locations

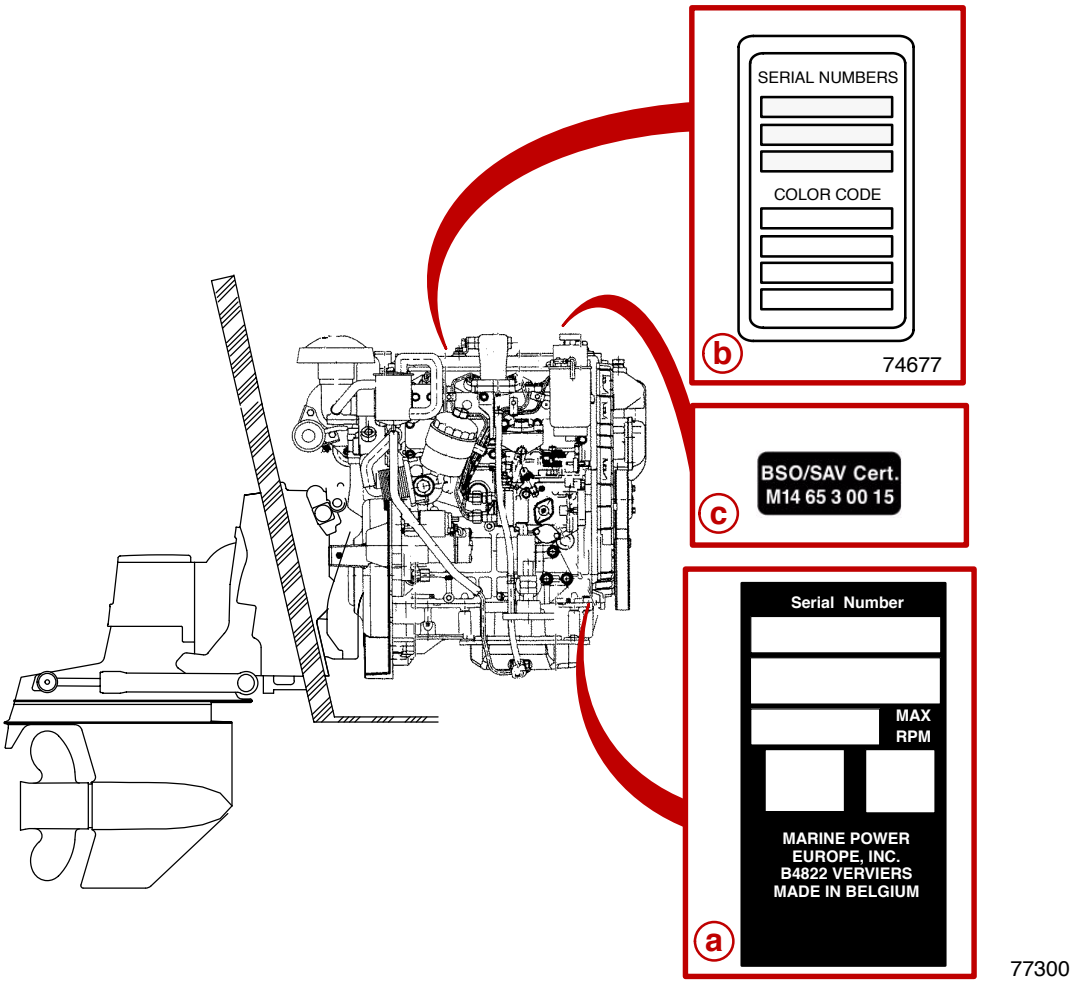

Sterndrive (MCM)

- **a** - Serial Number Plate
- **b** - Serialized Decal
- **c** - Emission Certificate Decal

Operation / Duty Cycle

It is the operator's responsibility to operate within the following specified operational capability, or duty cycle, as applicable to engine and installation:

Pleasure Duty Rating / Duty Cycle - D1.7L DTI	
Specified Operating RPM Range	4000 - 4400
Wide Open Throttle (WOT) Operation	Limited to short periods of time.

NOTE: *Pleasure Duty Rating applies to recreational planing craft used exclusively for pleasure and recreation.*

IMPORTANT: Damage caused by improper application or failure to operate within the operational capability, or duty cycle, will not be covered by the Mercury MerCruiser Diesel Limited Warranty.

Engine Break-In

Initial Break-In Procedure

The following procedure must be used on new and rebuilt diesel engines. This break-in procedure allows the proper seating of the pistons and rings, which greatly reduces the likelihood of problems.

IMPORTANT: It is recommended that the boat be accelerated gradually until this procedure has been completed.

IMPORTANT: Never operate the starter motor longer than 15 seconds at a time to avoid overheating the starter motor. If engine does not start, wait 1 minute to allow the starter motor to cool, then repeat starting procedure.

1. Refer to the appropriate Mercury MerCruiser Operation, Maintenance and Warranty Manual - Starting, Shifting and Stopping section, and start engine. Allow engine to idle until it has reached normal operating temperature.
2. Run engine in gear for 3 minutes at each of the following: 1400 rpm, 2800 rpm and 3500 rpm.
3. Run engine in gear for 3 minutes at each of the following: 1700 rpm, 3500 rpm and 4000 rpm.
4. Run engine in gear for 3 minutes at each of the following: 2100 rpm, 3500 rpm and WOT.

THIS PAGE IS INTENTIONALLY BLANK

IMPORTANT INFORMATION

Section 1B - Maintenance

Table of Contents

THIS PAGE IS INTENTIONALLY BLANK

Torque

Description	Nm	lb-in.	lb-ft
Oil Filter Top Piece	25		18
Nut, Exhaust Elbow-To-Turbocharger Clamp	10	89	

Lubricants / Sealants / Adhesives

Description	Where Used	Method of Use	Part Number
Perfect Seal	Vent and drain plugs	Thread length	92-34277--1
2-4-C Marine Lubricant With Teflon	Steering cable, hinge pins	Grease fitting	92-802859Q1
Special Lubricant 101	Steering cable (extended)	Coat exposed surfaces	92-802865Q1
U-Joint and Gimbal Bearing Grease	Gimbal bearing, sterndrive shaft bearings and U-joints,	Grease fittings	92-828052A2
Engine Coupler Spline Grease	Engine coupler splines	Grease fitting, coat surfaces	92-816391A4
Loctite 242	Sacrificial anode to plug	Thread length	Obtain Locally
Power Trim and Steering Fluid	Power trim or steering fluid	Fill reservoir	92-802880Q1
Dexron III - Automatic Transmission Fluid	Power steering fluid	Fill reservoir	Obtain Locally
Liquid Neoprene	Exposed terminals and connections	Light coating on surfaces	92-25711--3
Perfect Seal	Engine mounting nuts and bolts	Coat surfaces	92-34227-1
Premixed Marine Engine Coolant	Closed cooling system	Fill system	92-813054A2
Fleetguard Compleat (Product 91-50663 With DCA4 Additive)	Closed cooling system	Fill system	Obtain Locally
Corrosion Guard	Engine	Coat Surfaces	92-802878 55

Tools

Description	Part Number
Hose / Oil Pump Adapter	32-863642
Crankcase Oil Pump	802889A1
Flushing Attachment	91-44357Q2

Maintenance Schedules

NOTE: *Refer to appropriate Mercury MerCruiser Sterndrive Service Manual for information and procedures on sterndrive maintenance.*

⚠ WARNING

Always disconnect battery cables from battery BEFORE working around electrical system components to prevent injury to yourself or damage to electrical system should a wire be accidentally shorted.

Maintenance Intervals

Maintenance intervals and the tasks to be performed are generally based on an average boating application and environment. However, individual operating habits and personal maintenance preferences can have an impact on the suggested intervals. In consideration of these factors, Mercury MerCruiser has adjusted some maintenance intervals and corresponding tasks. In some cases, this may allow for more tasks to be performed in a single visit to the dealer, rather than multiple visits. Therefore, it is very important that the boat owner and servicing dealer discuss the Maintenance Schedule and develop appropriate maintenance intervals to coincide with individual operating habits, the environment and maintenance requirements.

Routine Maintenance

	Each Day Start	Each Day End	Weekly	Every Two Months
Check crankcase oil (interval can be extended based on experience).	•			
Check sterndrive unit oil level, trim pump oil level, and power steering pump fluid level, if equipped.	•			
Check water pickups for debris or marine growth. Check water strainer and clean, if equipped. Check coolant level.	•			
If operating in salt, brackish or polluted waters, flush cooling system after each use.		•		
Drain any water from fuel filter after each use (If operating in freezing temperatures).		•		
Inspect sterndrive unit anodes and replace if 50 percent eroded.			•	
Check battery connections and fluid level.				•
Lubricate propeller shaft and torque nut (if operating in only freshwater, this maintenance may be extended to every four months).				•
Operating in Saltwater Only: treat engine surface with Corrosion Guard.				•

Scheduled Maintenance

	After first 50 hours	Every 100 hours or Annually ◆	Every 200 hours or Annually ◆	Every 200 hours or 2 years ◆	Every 300 hours or 3 years ◆	Every 500 hours or 5 years ◆	Every 1000 hours or 5 years ◆
Change crankcase oil and filter.	●		●				
Retorque exhaust riser clamp.	●		●				
Change sterndrive unit oil and retorque connection of gimbal ring to steering shaft.		●					
Replace fuel filter.			●				
Check steering system and remote control for loose, missing or damaged parts. Lubricate cables and linkages.		●					
Inspect U-joints, splines, and bellows. Check clamps. Check engine alignment. Lubricate U-joints and splines.		●					
Lubricate hinge pins, gimbal bearing and engine coupler [8]		●					
Check continuity circuit for loose or damaged connections. Test MerCathode® unit output, if equipped.		●					
Drain condensation from intercooler.			●				
Lubricate drive shaft U-joints and tailstock input and output bearings.		●					

◆ Whichever Occurs First

[8] Lubricate engine coupler every 50 hours if operated at idle for prolonged periods of time.

Scheduled Maintenance (Continued)

	After First 50 hours	Every 100 hours or Annually ◆	Every 200 hours or Annually ◆	Every 200 hours or 2 years ◆	Every 300 hours or 3 years ◆	Every 500 hours or 5 years ◆	Every 1000 hours or 5 years ◆
Touch-up paint power package and spray with corrosion guard.		●					
Retorque engine mounts.					●		
Check electrical system for loose, damaged or corroded fasteners.					●		
Inspect condition and tension of belts.			●				
Check cooling system and exhaust system hose clamps for tightness. Inspect both systems for damage or leaks.			●				
Disassemble and inspect seawater pump and replace worn components.					●		
Clean seawater section of closed cooling system. Clean, inspect and test pressure cap. Check anodes.			●				
Replace coolant.				●			
Clean intercooler core.						●	
Inspect timing belt and pulleys.					●		
Replace timing belt.							●
Check valve clearance.							●
Clean fuel tank.							●

◆ Whichever Occurs First

Engine Specifications

MCM (Sterndrive) Models

Model		D1.7L DTI
Crankshaft Kilowatts (Horsepower) [1]		89.5 (120)
Propeller Shaft Kilowatts (Horsepower) [1]		86.5 (116)
Engine Type		4 Stroke, 4 Cylinder, Vertical In-Line, 4 Valves Per Cylinder, Dual Overhead Camshaft, Direct Injection, Turbocharged, Intercooled
Displacement		1.686 cu. L (103 cid)
Engine Weight		225 kg (495 lb)
Firing Order		1-3-4-2
Bore		79 mm (3.11 in.)
Stroke		86 mm (3.39 in.)
Compression Ratio		17.2:1
Valve Clearance	Intake	0.40 mm (0.016 in.)
	Exhaust	0.50 mm (0.020 in.)
Maximum High Idle No Load rpm		4980
Governed rpm Setting (Begins At:)		4400
Rated rpm at WOT		4000-4400
Idle rpm in Neutral		725 - 750
Oil Pressure [2]	725 - 750 rpm	79 kPa (0.8 bar) (11.4 psi) Minimum
	4400 rpm	340-490 kPa (3.5-5.0 bar) (49-71 psi)
Oil Temperature (Peak)		140° C (284° F)
Thermostat		82-95° C (180-203° F)
Coolant Temperature (Peak)		90°-104° C (194°-219° F)
Electrical System		12-volt Negative (–) Ground
Alternator Rating		600 W,12 v, 50 Amp.
Recommended Battery Rating		750 cca / 950 mca / 180 Ah
Starter		12v, 1.4 kW

[1] Power rated in accordance with NMMA Procedure - ISO 3046 (Technically Identical to ICOMIA 28-83).

[2] Engine at normal operating temperature.

Capacities

NOTICE
All capacities are approximate fluid measures.

Engine

NOTICE
Unit Of Measurement: Liters (U.S. Quarts).

Model	**D1.7L DTI**
Total Oil Capacity [1]	6-1/2 (6-3/4)
Coolant (Anti-Freeze) Capacity	8-3/4 (9-1/4)

[1] Always use dipstick to determine exact quantity of oil required.

Drive

NOTICE
Unit Of Measurement: Milliliters (U.S. Fluid Ounces).

Model	**Alpha**
Drive Unit Oil Capacity (With Drive Lube Monitor)	1892 (64)

Engine External Views

Starboard Side and Front View

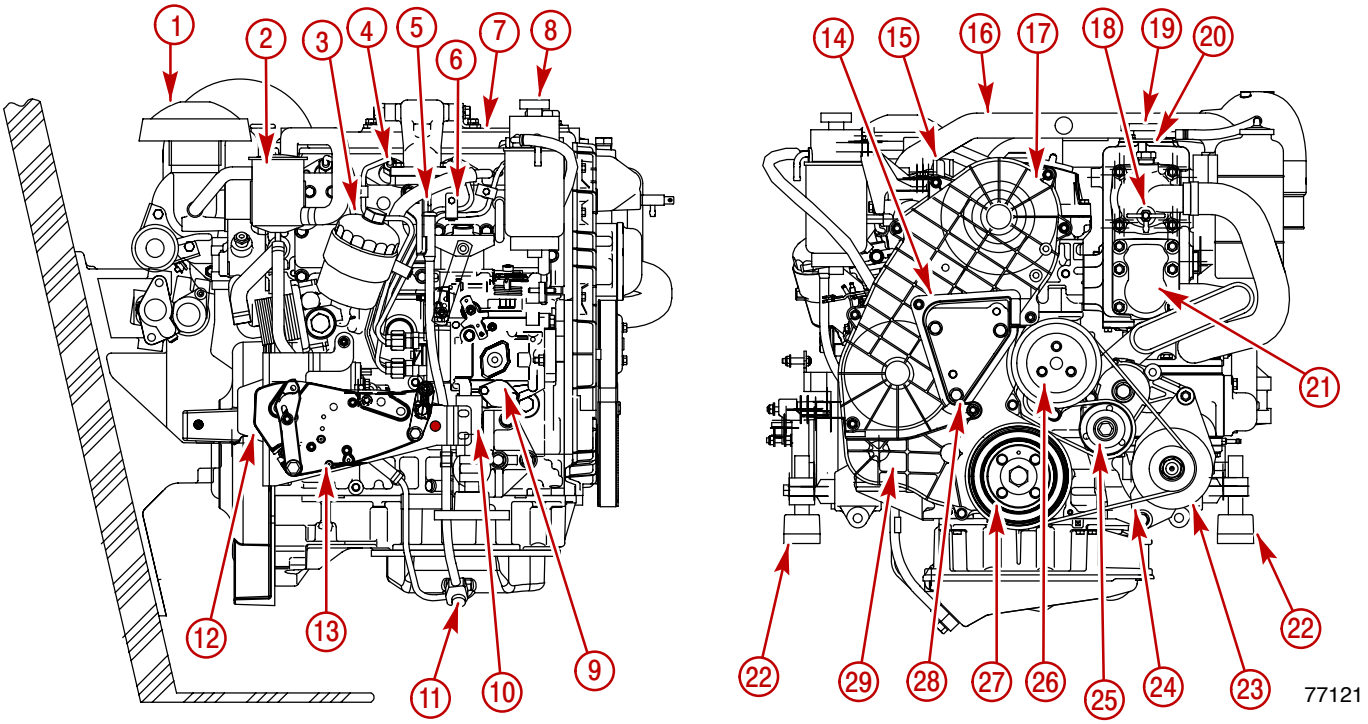

1 - Air Cleaner
2 - PCV / Oil Separator
3 - Oil Filter
4 - Injector Cover
5 - Oil Dipstick
6 - Injection Pipe
7 - Valve Cover
8 - Primer Pump / Water Separating Fuel Filter
9 - Injection Pump
10 - Injection Pump Bracket
11 - Oil Drain Plug
12 - Starter Motor
13 - Shift Plate / Electrical Bracket / Circuit Breaker
14 - Engine Plate
15 - Engine Lifting Eye
16 - Intake Manifold Air Duct
17 - Timing Cover, Upper
18 - Seawater Drain Plug
19 - Pressure Cap
20 - Sacrificial Anode
21 - Thermostat Housing
22 - Engine Mount
23 - Alternator
24 - Serpentine Belt
25 - Automatic Tensioner Pulley
26 - Engine Water Circulating Pump Pulley
27 - Crankshaft Pulley
28 - Engine Plate Bolt
29 - Timing Cover, Lower

Port Side and Rear View

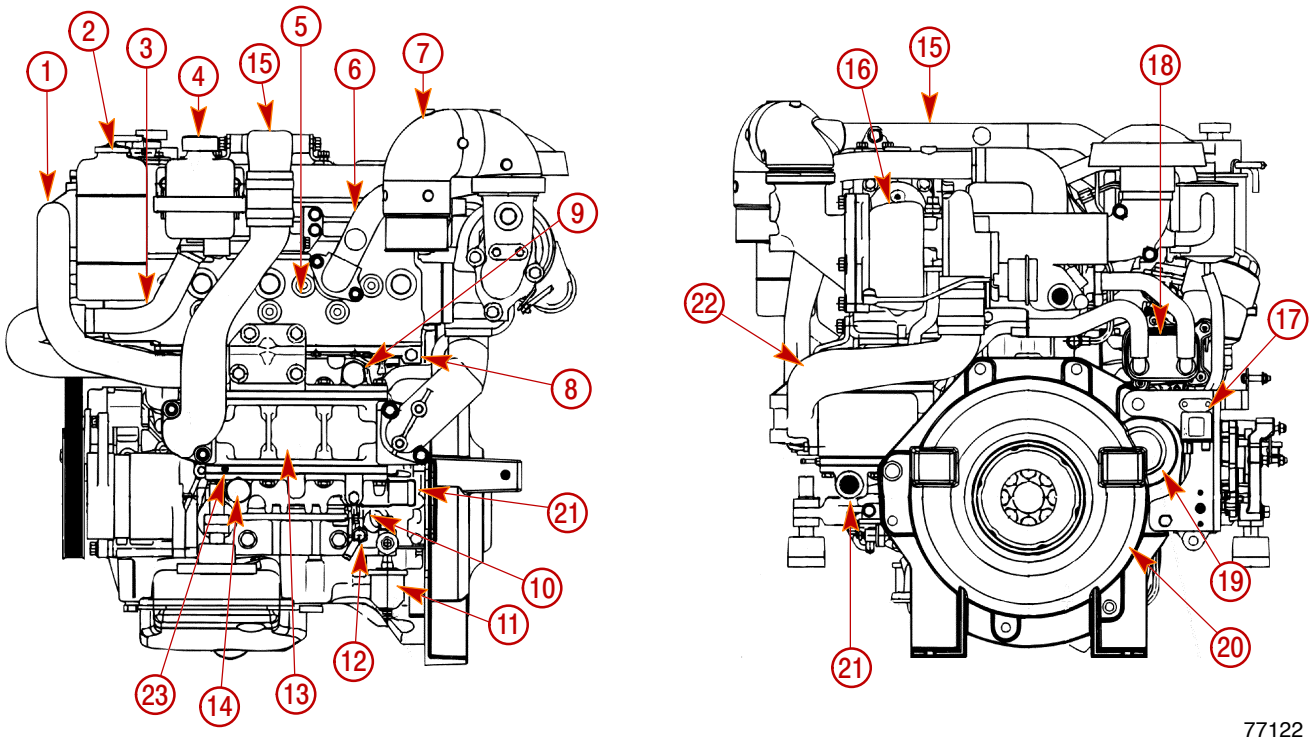

1 - Hose, To Heat Exchanger
2 - Coolant Recovery Bottle
3 - Hose
4 - Gear Lube Monitor Bottle
5 - Heat Exchanger
6 - Heat Exchanger Coolant Pipe
7 - Exhaust Elbow
8 - Coolant Drain Plug
9 - Sacrificial Anode
10 - Seawater Drain Plug
11 - Oil Pressure Gauge Sending Unit
12 - Engine Coolant Drain Fitting
13 - Intercooler
14 - Sacrificial Anode
15 - Intake Manifold Air Duct
16 - Turbocharger
17 - Starter Relay
18 - Engine Oil Cooler
19 - Starter Motor
20 - Flywheel Housing
21 - Seawater Inlet Fitting
22 - Intercooler Air Duct
23 - Intercooler Condensate Drain Plug

Engine Oil

⚠ CAUTION

ENVIRONMENTAL HAZARD! **Discharge of oil or oil waste into the environment is restricted by law. Do not spill oil or oil waste into the environment when using or servicing your boat. Contain and dispose of oil or oil waste as defined by local authorities.**

Requirement

To help obtain optimum engine performance and to provide maximum protection, the engine requires engine oil with a rating of HD-SAE-API CG-4, CH-4.

Recommended

Mercury MerCruiser strongly recommends the use of:

- Mercury Diesel Engine Oil

This oil is specially blended 15W-40 oil with Marine Additives, for all temperature operation. It exceeds requirements for API CH-4, CF-4, CG-4 and CF-2 oils.

Other all temperature operation 15W-40 oils approved by Mercury Marine and Marine Power Europe.

- Shell Myrina
- Texaco Ursa Super TD
- Veedol Turbostar
- Mopar
- Wintershall Multi-Rekord
- Wintershall Viva 1

Crankcase Level

OVERFILLED ENGINE CRANKCASE

An overfilled crankcase can cause a fluctuation or drop in oil pressure on Mercury MerCruiser engines. The over-full condition results in the engine crankshaft splashing and agitating the oil, causing it to become aerated. The aerated oil causes a loss of engine performance and an increase in crankcase backpressure. An extreme overfill condition could result in large amounts of oil being drawn into the intake.

Care must be taken when checking engine oil level. Oil level must be maintained between the “MIN” mark and the “MAX” mark on the dipstick. To ensure that you are not getting a false reading, observe the following before checking the oil level.

- Boat at rest in the water, or -
- If boat is on a trailer, raise or lower bow until the boat is setting like it does at rest in the water.
- Allow ten minutes for oil to drain into the oil pan if engine has just been operated or oil has just been added.

CHECKING / FILLING

IMPORTANT: Engine crankcase oil must be checked at intervals specified in Maintenance Schedule. It is normal for an engine to use a certain amount of oil in the process of lubricating and cooling the engine. The amount of oil consumed is greatly dependent upon engine speed, with consumption being highest at WOT and decreasing substantially as engine speed is reduced.

If it becomes necessary to check the oil level during operation, stop the engine. Allow approximately ten minutes for the oil to drain into the oil pan.

1. Remove oil dipstick. Wipe clean and reinstall into dipstick tube.

2. Remove dipstick and observe oil level. Oil must be between “MIN” and “MAX” marks on dipstick.

NOTE: *Distance between marks is equivalent to approximately 1.0 L (1 U.S. quart).*

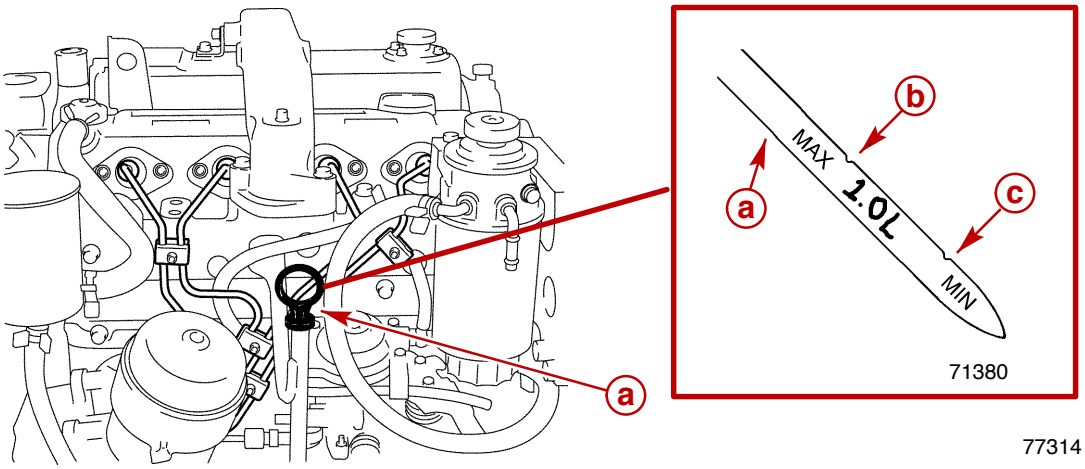

a - Oil Dipstick
b - MIN - Minimum Oil Level Mark
c - MAX - Maximum Oil Level Mark

3. If oil level is low, remove oil filler cap. Add specified oil to bring level up to, but not over, maximum oil level mark “MAX” on dipstick.

NOTE: *It takes several minutes for the added oil to drain to the oil pan. Wait approximately 10 minutes and recheck the level.*

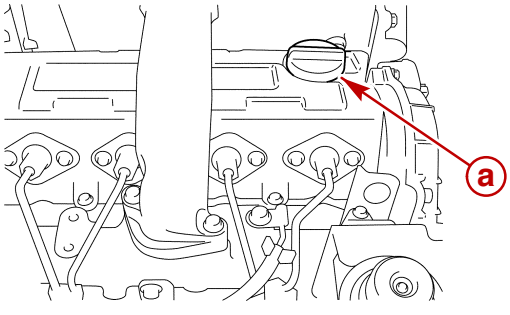

a - Oil Filler Cap

4. Reinstall oil filler cap.

Changing Oil and Filter

⚠ CAUTION

ENVIRONMENTAL HAZARD! **Discharge of oil or oil waste into the environment is restricted by law. Do not spill oil or oil waste into the environment when using or servicing boat. Contain and dispose of oil or oil waste as defined by local authorities.**

IMPORTANT: Change oil when engine is warm from operation. Warm oil flows more freely, carrying away more impurities.

1. Start engine and allow it to reach normal operating temperature.
2. Stop engine and allow approximately 10 minutes for oil to drain into oil pan.
3. Attach crankcase oil pump to dipstick tube using adapter.
4. Pump oil out of crankcase into drain pan.
5. Remove pump and adapter.
6. Install oil dipstick.

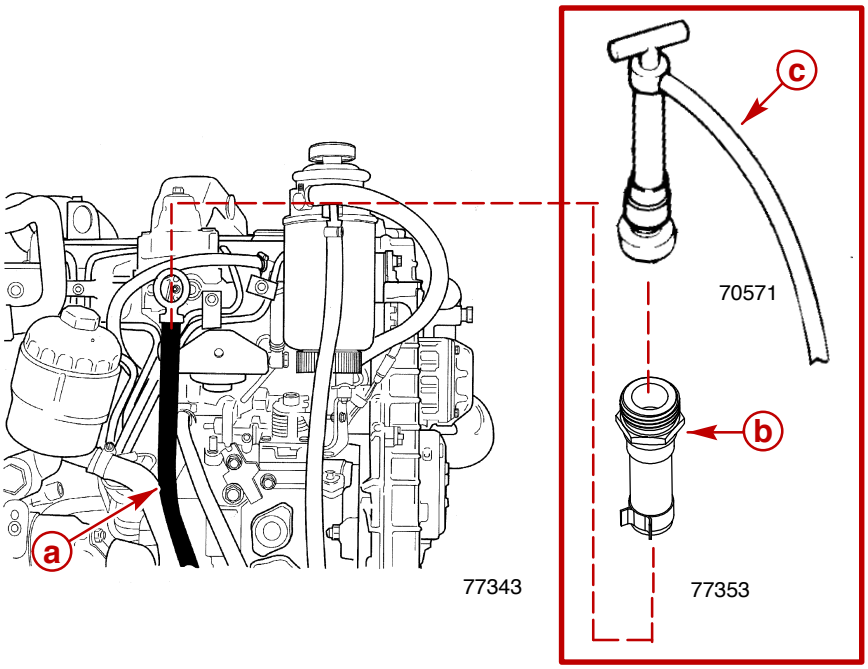

a - Dipstick Tube
b - Hose / Oil Pump Adapter (P/N 32-863642)
c - Crankcase Oil Pump (P/N 802889A1)

7. Use a filter wrench or appropriate socket to remove the oil filter assembly from the filter housing.

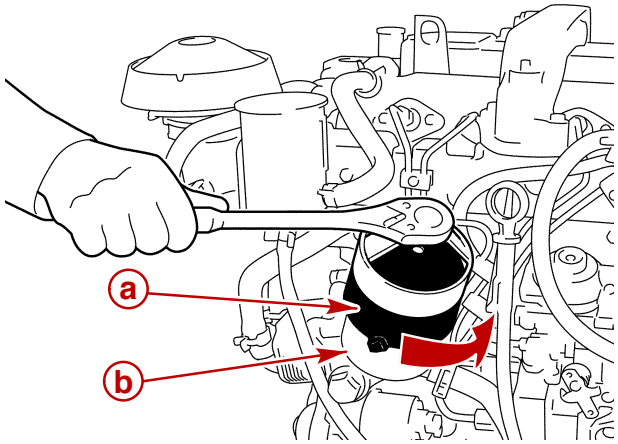

77244

a - Oil Filter Assembly
b - Filter Housing

8. Discard the old filter element. Discard the old O-rings from the top piece.

NOTE: *Element cannot be cleaned and reused. It must be replaced.*

9. Install the three new O-rings.
10. Apply a coat of engine oil to the O-rings.
11. Install the oil filter element on the top piece.

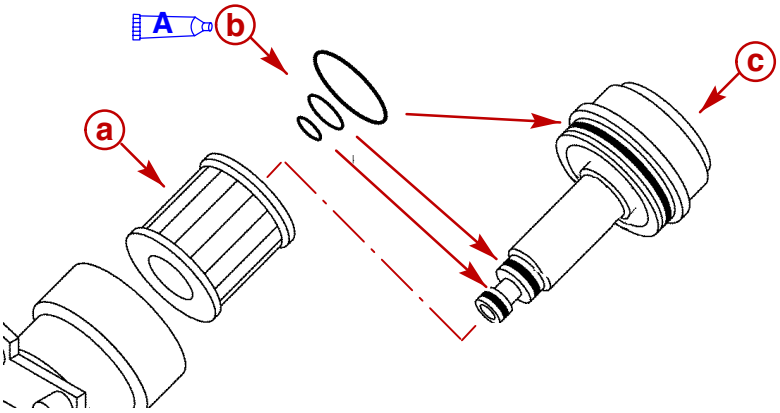

77242

a - Element
b - O-rings
c - Top Piece

Description		Where Used	Method of Use	Part Number
A	Engine Oil	O-rings	Coat surfaces	Obtain Locally

12. Install the top piece into the oil filter housing.
13. Turn the top piece until seated against the oil filter housing. Using the filter wrench or socket, torque top piece.

Description	Nm	lb-in.	lb-ft
Oil Filter Top Piece	25		18

IMPORTANT: Over tightening the top piece will cause deformation and oil leaks.

14. Remove oil fill cap and refill with new engine oil.

⚠ CAUTION

Do not overfill the engine with oil. Too much engine oil will cause a loss of engine performance and an increase in crankcase back-pressure.

15. Add specified oil to bring level up to, but not over, maximum oil level mark “MAX” on dipstick.
16. Reinstall oil filler cap.
17. Supply cooling water to water inlet openings on sterndrive unit.

IMPORTANT: Avoid overheating the starter in the following step. Do NOT engage starter for more than 15 seconds; allow at least one minute cool down time before re-engaging starter for another 15 seconds.

18. After oil change, pre-lubricate turbocharger and engine. To do this, hold the STOP switch engaged while you simultaneously turn the key switch to the START position for 15 seconds. Doing this *together* turns the engine without starting it. Repeat the process as needed. Pre-lubrication is complete when oil pressure is shown by instruments.
19. Start engine and allow it to reach normal operating temperature.

IMPORTANT: Always use dipstick to determine how much oil is required.

20. Stop engine and allow approximately 10 minutes for oil to drain into oil pan.
21. Remove dipstick and observe oil level. Oil must be between “MIN” and “MAX” marks on dipstick.
22. Start engine and check for leaks.

Fuel

General Information

⚠ WARNING

FIRE HAZARD: Fuel leakage from any part of the fuel system can be a fire hazard which can cause serious bodily injury or death. Careful periodic inspection of entire fuel system is mandatory, particularly after storage. All fuel components including fuel tanks - whether plastic, metal or fiberglass - fuel lines, primers, fittings and fuel filters should be inspected for leaks, softening, hardening, swelling or corrosion. Any sign of leakage or deterioration requires replacement before further engine operation.

⚠ WARNING

Electrical system components on this engine are not external ignition protected. DO NOT STORE OR UTILIZE GASOLINE ON BOATS EQUIPPED WITH THESE ENGINES, UNLESS PROVISIONS HAVE BEEN MADE TO EXCLUDE GASOLINE VAPORS FROM ENGINE COMPARTMENT (REF: 33 CFR). Failure to comply could result in fire, explosion and/or severe personal injury.

IMPORTANT: Use of improper or water contaminated diesel fuel can cause serious engine damage. Use of improper fuel is considered misuse of engine, damage caused thereby will not be covered by warranty.

⚠ WARNING

Under *no circumstances* should gasoline, gasohol and/or alcohol be mixed with diesel fuel for any reason. This mixture of gasoline, gasohol and/or alcohol with diesel fuel is highly flammable and produces a significant risk to the user.

Grade 2-D diesel fuel is required, meeting ASTM Standards D975 (or fuel rated Diesel DIN 51601) and having a minimum cetane rating of 45.

The cetane number is a measure of the ignition quality of diesel fuel. Increasing the cetane number will not improve overall engine performance, but it may be necessary to raise the cetane rating for low temperature or high altitude use. A lower cetane number could cause hard starting and slower warm-up and could increase engine noise and exhaust emissions.

NOTE: *If your engine suddenly becomes noisy after a fuel fill, you may have received sub-standard fuel with a low cetane rating.*

Sulphur content of the above fuel is rated at 0.50% by weight, maximum (ASTM). Limits may vary in countries outside of the United States.

On intermittent use engines, high sulphur content diesel fuel will greatly increase:

- Corrosion on metal parts
- Deterioration of elastomer and plastic parts
- Corrosion and extensive damage and excessive wear of internal engine parts, particularly bearings
- Starting and operating difficulties

Recommended Fuels

⚠ CAUTION

Avoid fuel system damage. Use of fuels not recommended by Mercury MerCruiser may cause hard-starting and other various troubles such as premature wear of the injection pump plungers and injection nozzles resulting from the deposit of carbon residue and other contaminants.

Diesel Fuel/Applicable Standard	Recommendation
JIS (Japanese Industrial Standard)	No.2
DIN (Deutsche Industrie Normen)	DIN 51601
SAE (Society Of Automotive Engineers) Based on SAE J-313C	No.2-D
BS (British Standard) Based On BSEN 590-1197	A-1

Diesel Fuel In Cold Weather

Unaltered diesel fuels thicken and gel in cold temperatures unless treated. Virtually all diesel fuels are climatized to allow their use in the particular region for that time of the year. It is the owner/operator's responsibility, if it becomes necessary, to further treat diesel fuel, by adding a commercial standard brand anti-gel diesel fuel additive. Follow product directions.

Fuel Filter

PRECAUTIONS

⚠ WARNING

Always disconnect battery cables from battery BEFORE working on fuel system to prevent fire. This eliminates the engine wiring as a potential source of ignition.

⚠ WARNING

Be careful when draining, filling or replacing water separating fuel filter; diesel fuel is flammable. Be sure that the ignition key is OFF. DO NOT smoke or allow sources of open flame in the area while changing fuel system components. Wipe up any spilled fuel immediately. DO NOT allow fuel to come into contact with any hot surface, which may cause it to ignite.

⚠ WARNING

Dispose of rags, paper and other fuel-soaked items in an appropriate air-tight, fire retardant container. Fuel-soaked items may spontaneously ignite and result in a fire hazard which could cause serious bodily injury or death.

⚠ WARNING

Make sure no fuel leaks exist before closing engine hatch.

⚠ CAUTION

Absolute cleanliness is required for work on the fuel injection system, since the injection pump and fuel injectors have very close tolerances. Even minute particles of dirt or small amounts of water can impair the function of the fuel injection system.

DRAINING

1. Install a hose on drain cap fitting.
2. Open drain cap at bottom of filter approximately 5 turns.
3. Move plunger knob on pump/primer up and down repeatedly, about 10 times until approximately 4 mL (2 fl oz) is drained or until fuel appears clear.

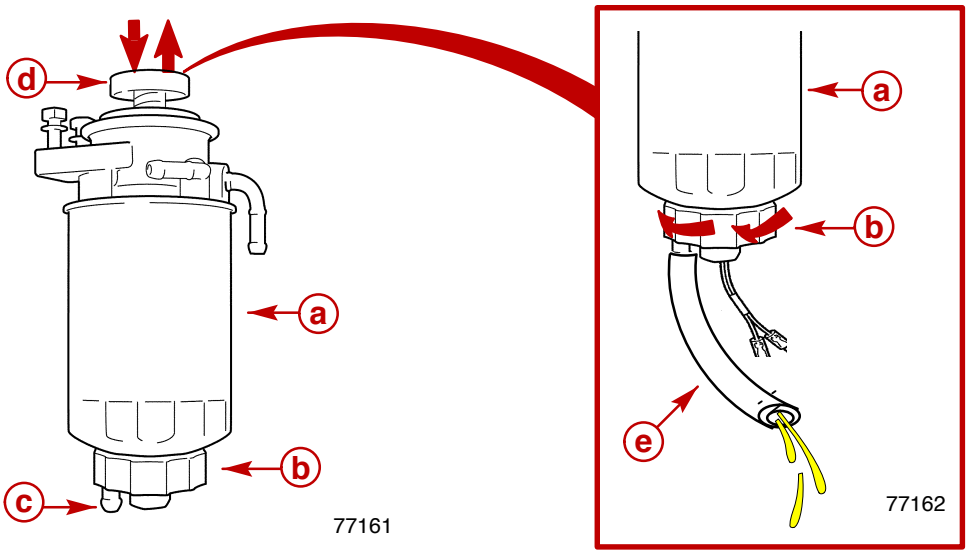

a - Fuel Filter
b - Drain Cap
c - Fitting
d - Plunger/Knob
e - Hose

4. Close drain cap.
5. Remove hose.
6. Fill fuel filter.

FILLING

1. Loosen, DO NOT REMOVE, bleeder screw on filter bracket.
2. Move plunger knob on pump/primer up and down repeatedly, until an air free stream of fuel flows from bleeder screw.
3. Tighten bleeder screw.

⚠ CAUTION

Avoid the risks of fuel leaking. The bleeder screw uses a gasket (sealing washer) to prevent fuel from leaking. Replace this gasket as needed.

4. Operate the pump/primer several times and check bleeder for fuel leaks.

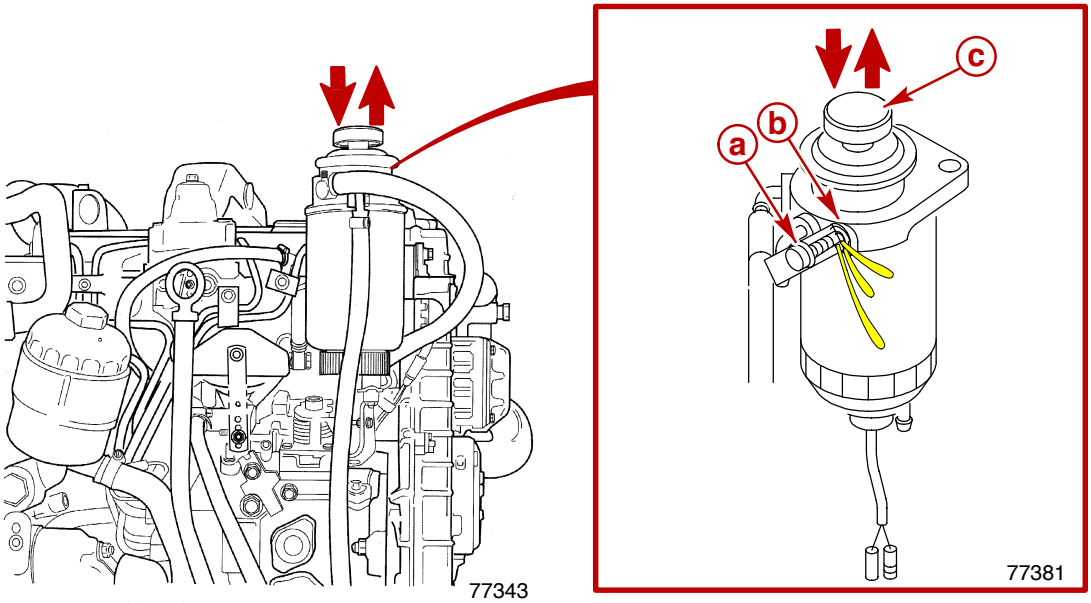

a - Bleeder Screw
b - Gasket
c - Pump/Primer Knob

5. Dispose of waste fuel appropriately.
6. Connect battery cables.
7. Start engine and check for fuel leaks.

REMOVAL

NOTICE
Refer to Fuel Filter Precautions BEFORE proceeding.

1. Remove water separating fuel filter and sealing ring.

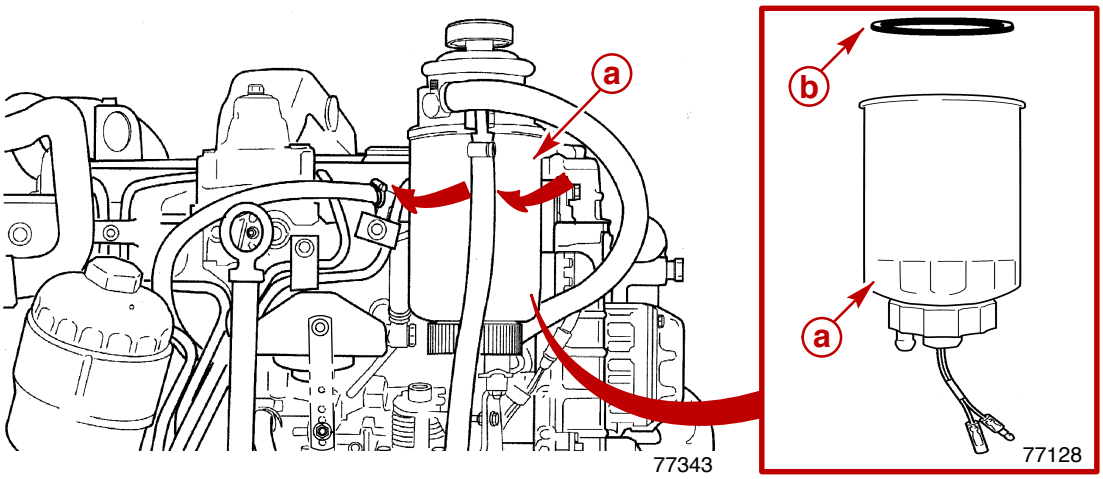

a - Fuel Filter
b - Sealing Ring

IMPORTANT: Filter cannot be cleaned and reused. It must be replaced.

2. Remove the drain cap and O-ring from the filter.
3. Remove the O-ring from the drain cap.

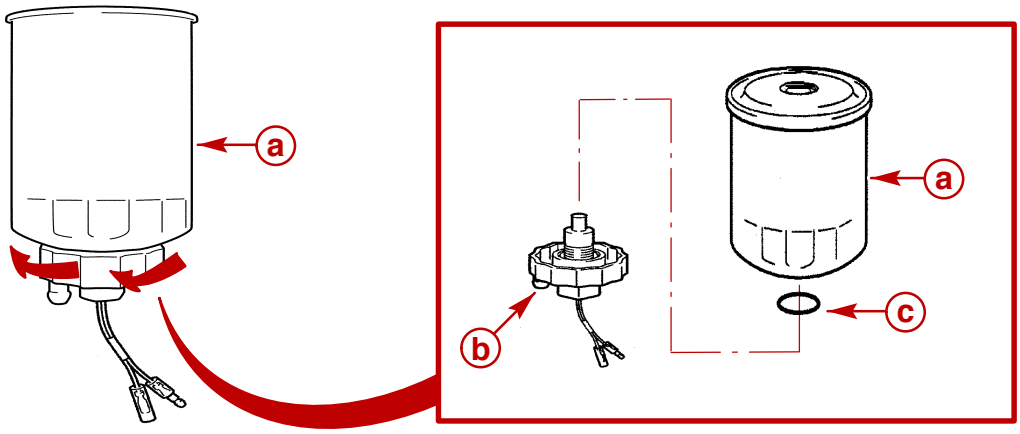

77128

a - Fuel Filter
b - Drain Cap
c - O-ring

4. Retain the drain cap. Discard the used filter, sealing ring and O-ring.

INSTALLATION

1. Install the drain cap with new O-ring on the new fuel filter. Tighten drain cap.

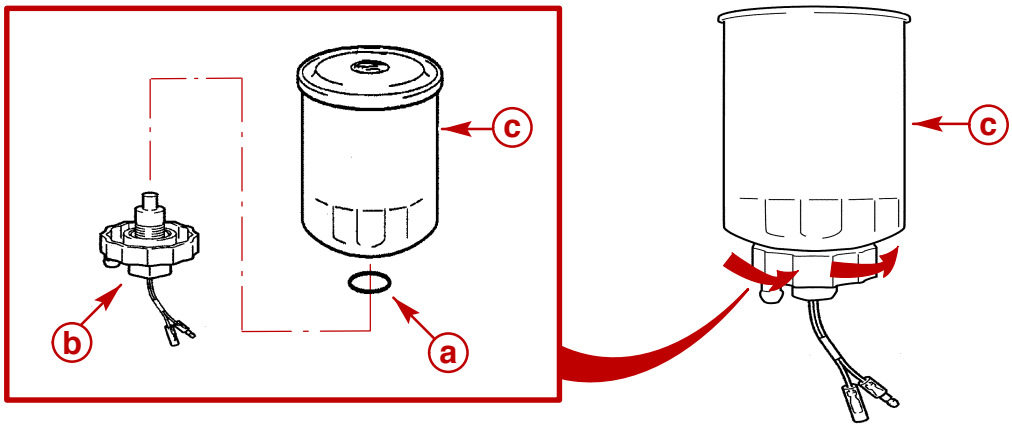

77128

a - O-ring
b - Drain Cap
c - Fuel Filter

2. Clean filter sealing surface on mounting bracket.
3. Coat the sealing ring on new filter with clean engine oil.

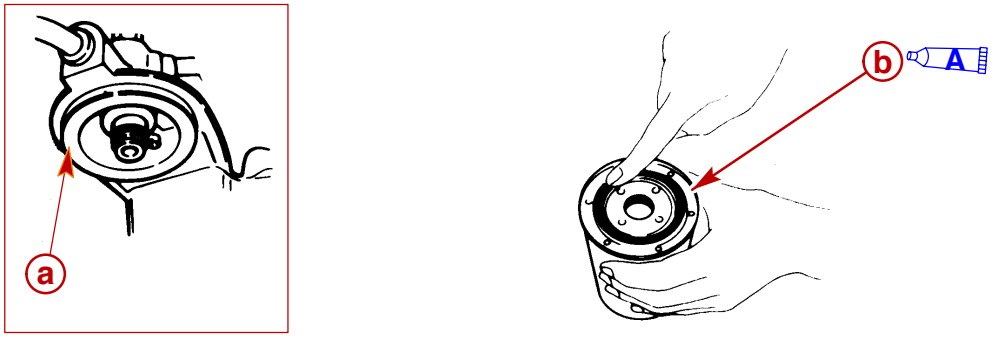

77296

Typical

a - Filter Sealing Surface
b - Sealing Ring

Description		Where Used	Method of Use	Part Number
A	Engine Oil	Sealing Ring	Coat surfaces	Obtain Locally

4. Thread the filter onto the bracket until the sealing ring contacts the bracket.
5. Tighten the fuel filter an additional 2/3 of a turn with a filter wrench.
6. Ensure that drain cap is securely tightened.
7. Fill fuel filter. Check filter and drain cap for fuel leaks.
8. Start and operate engine. Check filter connection for fuel leaks.

Closed Cooling System

Coolant Requirement

⚠ CAUTION

Alcohol or methanol based anti-freeze or plain water are not recommended for use in the closed cooling section of cooling system at any time.

Because diesel engines are high compression engines and related higher engine operating temperatures are created, the closed cooling system and engine must remain as clean as possible to provide adequate engine cooling. This can only be assured by using the proper anti-freeze, water, additives and inhibitors. It is recommended that the closed cooling section of the cooling system be filled with a low silicate formula of ethylene glycol anti-freeze in solution with deionized water. A low silicate formula prevents anti-freeze separation, which causes a silicate gelatin to form. This gelatin will block engine and heat exchanger passages causing engine overheating.

The coolant, if not premixed, should be mixed before being added to the closed cooling system using anti-freeze and deionized water. Common tap water or softened water contains unwanted minerals, which can leave large deposits in the system restricting the cooling system efficiency. In addition, additives and inhibitors introduced into acceptable coolant solutions will form a protective film on internal passages and provide protection against internal cooling system erosion.

The closed cooling section should be kept filled year-round with an acceptable coolant solution. Do not drain closed cooling section for storage, this will promote rusting of internal surfaces. If engine will be exposed to freezing temperatures, ensure that closed cooled section is filled with a properly mixed anti-freeze/coolant solution to protect engine and closed cooling system to lowest temperature to which they will be exposed.

IMPORTANT: The anti-freeze/coolant used in these marine engines must be a low silicate ethylene glycol, containing special additives and deionized, purified water. Using other types of engine coolant may cause fouling of the heat exchangers and overheating of the engine. Do not combine different types of coolants without knowing that they are compatible. Refer to the coolant manufacturer's instructions.

Some acceptable types of anti-freeze/coolants are listed in the following table. Refer to Maintenance Schedules for change intervals.

Description	Part Number
Premixed Marine Engine Coolant	92-813054A2
Fleetguard Compleat (Product 91-50663 with DCA4 additive)	Obtain Locally

Checking Level

1. Coolant level must be between the bottom “MIN” mark and top (Full Hot) mark on coolant recovery bottle with the engine at normal operating temperature.

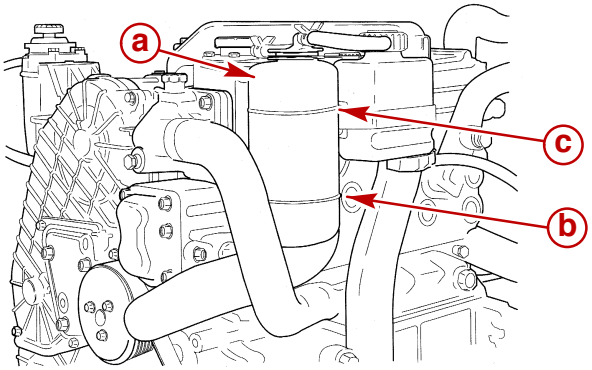

77334

a - Coolant Recovery Bottle
b - Bottom “MIN” Mark
c - Top (Full Hot) Mark

2. Coolant level must be to the bottom edge of the fill neck with the engine cool.
3. Add specified coolant to the coolant recovery bottle as required.

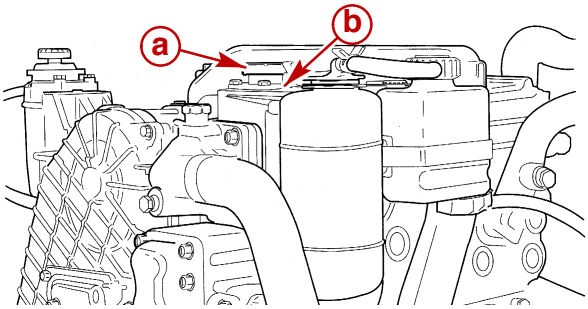

77334

a - Pressure Cap
b - Fill Neck

4. If coolant is low, check the coolant system for malfunction.

IMPORTANT: When installing pressure cap, be sure to tighten it until it contacts stops on filler neck.

5. Install pressure cap.

Draining

IMPORTANT: Observe the following:

- Insert a wire into drain holes to ensure that foreign material is not obstructing the drain holes.
- Engine must be as level as possible to ensure complete draining of cooling system.
- Closed cooling section must be kept filled year round with recommended coolant. If engine will be exposed to freezing temperatures, make sure closed cooling section is filled with an ethylene glycol anti-freeze and water solution properly mixed to protect engine to lowest temperature to which it will be exposed.
- Do not use Propylene Glycol anti-freeze in the closed cooling section of the engine.

⚠ WARNING

Allow engine to cool before removing pressure cap. Sudden loss of pressure could cause hot coolant to boil and discharge violently causing severe injury.

1. Allow engine to cool. After engine has cooled, turn cap 1/4 turn to allow any pressure to escape slowly, then push down and turn cap all the way off of heat exchanger/coolant tank.
2. Drain coolant by removing drain plug.

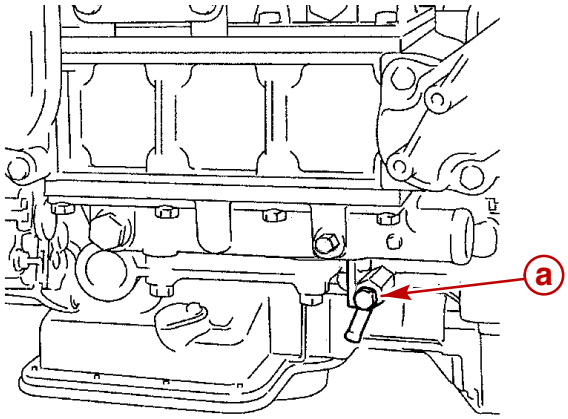

77143

a - Coolant Drain Plug

3. Clean out drain hole using a stiff piece of wire; repeat until entire system has drained.
4. After coolant has drained completely, coat threads of drain plug with Perfect Seal and reinstall. Tighten securely.

Description	Where Used	Method of Use	Part Number
Perfect Seal	Drain Plug	Thread Length	92-34277--1

5. Empty coolant recovery bottle.
6. If required, clean system. Refer to SECTION 6A.

Filling

1. Remove vent plug on water pipe near turbocharger.

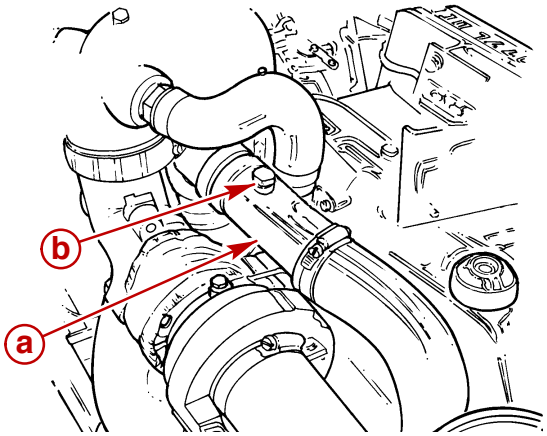

77366

a - Water Pipe
b - Vent Plug

2. Slowly fill with coolant through heat exchanger fill neck.

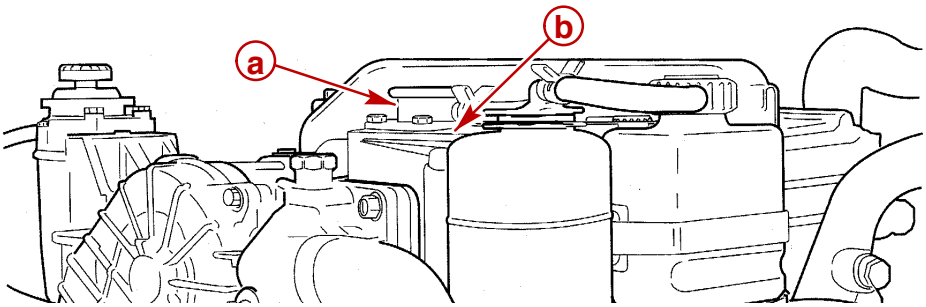

77334

a - Fill Neck
b - Heat Exchanger

3. Continue slowly filling until air free stream of coolant appears at vent plug opening.
4. Coat threads of vent plug with Perfect Seal and install.

Description	Where Used	Method of Use	Part Number
Perfect Seal	Vent Plug	Thread Length	92-34277--1

5. Continue filling until coolant level is at bottom of fill neck.

⚠ CAUTION

Avoid seawater pickup pump impeller damage and subsequent overheating damage to sterndrive unit. DO NOT operate engine without water being supplied to seawater pickup pump.

6. Supply cooling water to water inlet openings on sterndrive unit.
7. With pressure cap off, start engine and operate at fast idle (1500-1800 rpm). Add coolant to heat exchanger, as required, to maintain coolant level 25 mm (1 in.) below filler neck.
8. After engine has reached normal operating temperature (thermostat fully open), and coolant level remains constant, fill heat exchanger to bottom of fill neck.
9. Install pressure cap.

IMPORTANT: When installing pressure cap, be sure to tighten it until it contacts stops on filler neck.

10. Observe engine temperature gauge to make sure that engine operating temperature is normal. If gauge indicates excessive temperature, stop engine immediately and examine for cause.
11. Remove cap from coolant recovery bottle and fill to a level between the bottom “MIN” and top (Full Hot) marks with coolant. Reinstall cap.
12. With engine still operating, check hose connections, fittings and gaskets for leaks.

Sacrificial Anodes

Sacrificial anode locations:

- Front and rear heat exchanger end covers.
- Upper and lower covers of the intercooler

1. Remove anode plugs and inspect sacrificial anodes for deterioration.

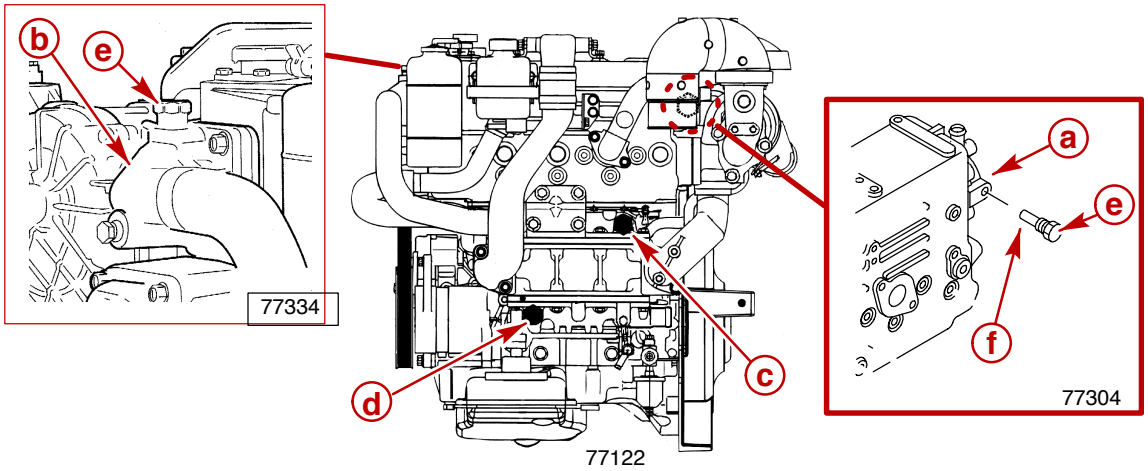

a - Rear End Cover
b - Front End Cover
c - Upper Intercooler Anode
d - Lower Intercooler Anode
e - Anode Plug
f - Sacrificial Anode

2. Replace sacrificial anodes when 50% deteriorated.

- Length When New - 32 mm (1-1/4 in.)
- Diameter When New - 15 mm (5/8 in.)

3. Unscrew anode from anode plug by holding plug hex head and turning anode.
4. Clean interior threads of anode plug.
5. Apply specified sealant to threads of new sacrificial anode and install into anode plug. Tighten securely.

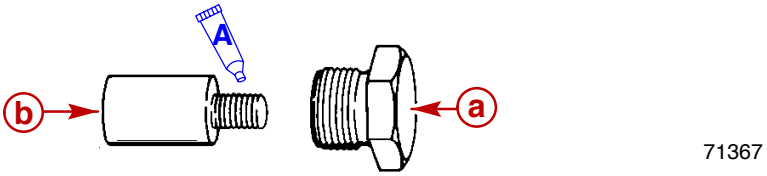

a - Anode Plug
b - Sacrificial Anode

	Description	Where Used	Method of Use	Part Number
A	Loctite Pipe Sealant With Teflon	Sacrificial anode to plug	Thread length	Obtain Locally

6. Install sacrificial anode and plug. Tighten securely.

Flushing Seawater Section

If engine is operated in salty, polluted or mineral-laden water, flush seawater section of cooling system (preferably after each use) to reduce corrosion and prevent the accumulation of deposits in the system. Thoroughly flush seawater section prior to storage.

⚠ WARNING

When flushing, be certain the area around propeller is clear and no one is standing nearby. To avoid possible injury, remove propeller.

1. Install Flushing Attachment (or equivalent) over water pickup openings in gear housing.
2. Attach a hose between the flushing attachment and a water tap.

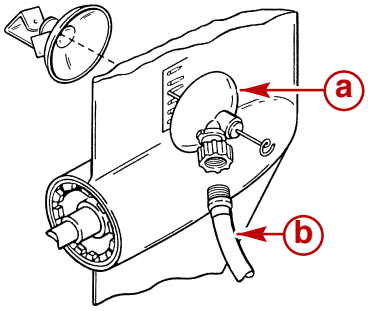

72012

a - Flushing Attachment
b - Hose

3. Lower sterndrive unit to full DOWN/IN position.

⚠ CAUTION

Do not run engine above 1500 rpm when flushing. Suction created by seawater pickup pump may collapse flushing hose, causing engine to overheat.

4. Partially open water tap (approximately 1/2 maximum capacity). DO NOT use full water pressure.
5. Place remote control in NEUTRAL, IDLE speed position and start engine.
6. Operate engine at idle speed in NEUTRAL for 10 minutes, then stop engine.
7. Shut off water tap.
8. If boat is in the water, raise sterndrive unit to TRAILER position.
9. Remove hose and flushing attachment.

Inspecting Water Pickups

1. Ensure water pickup openings on sterndrive gear housing are clean and not obstructed.

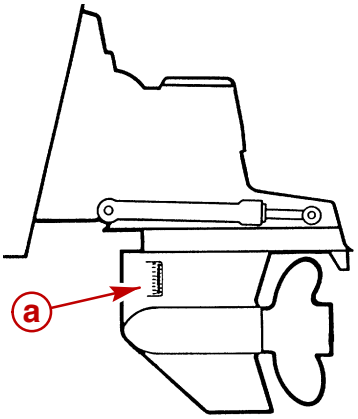

Port Side Shown (Starboard Same)

a - Water Pickup Openings

Lubrication

Throttle Cable

1. Lubricate pivot points and guide contact surfaces with SAE 30W engine oil.

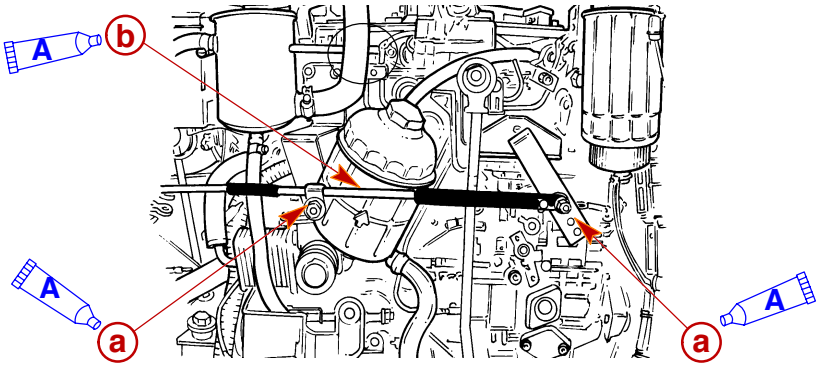

Single Cable Shown (Dual Similar)

a - Pivot Points
b - Guide Contact Surfaces

Description		Where Used	Method of Use	Part Number
A	SAE 30W Engine Oil	Throttle cable pivot points and guide contact surfaces	Coat surfaces	Obtain Locally

Shift Cable

1. Lubricate pivot points and guide contact surfaces with SAE 30W engine oil.

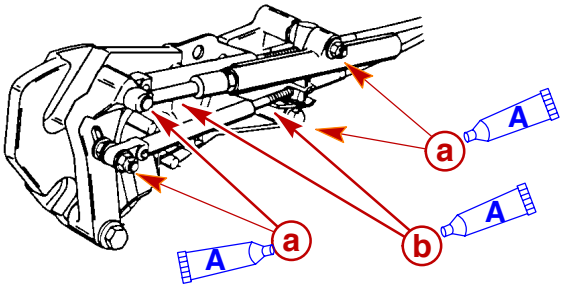

a - Pivot Points
b - Guide Contact Surface

Description		Where Used	Method of Use	Part Number
A	SAE 30W Engine Oil	Shift cable pivot points and guide contact surfaces	Coat surfaces	Obtain Locally

Engine Coupler / U-Joint Shaft Splines

1. Apply 8-10 pumps of specified lubricant to engine coupler splines. If boat is operated at idle for prolonged periods of time, coupler should be lubricated every 50 hours.

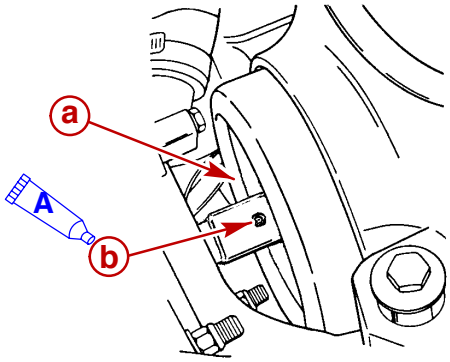

73346

a - Engine Coupler
b - Grease Fitting

	Description	Where Used	Method of Use	Part Number
A	Engine Coupler Spline Grease	Engine coupler splines	Grease fitting	92-816391A4

Drive Shaft Extension Models

1. Apply 3-4 pumps of specified lubricant to drive shaft grease fittings.

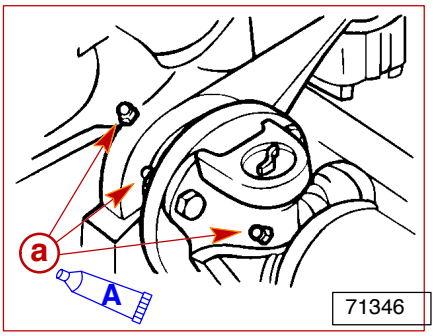

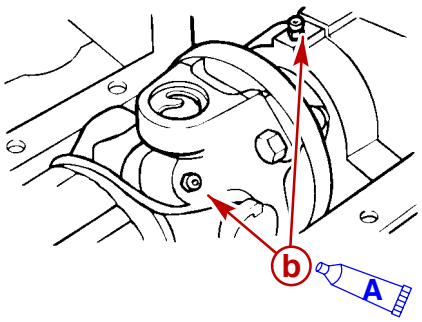

a - Transom End Fittings
b - Engine End Fittings

	Description	Where Used	Method of Use	Part Number
A	U-Joint and Gimbal Bearing Grease	Drive shafts	Grease fitting	92-828052A2

Sterndrive Unit and Transom Assembly

1. Apply approximately 8-10 pumps of specified lubricant to the gimbal bearing.
2. Apply 1-2 pumps of specified lubricant to hinge pins.

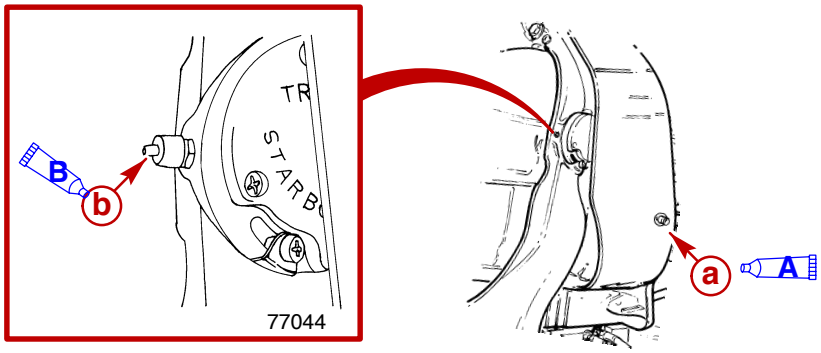

a - Gimbal Bearing
b - Hinge Pins

	Description	Where Used	Method of Use	Part Number
A	U-Joint and Gimbal Bearing Grease	Gimbal bearing	Grease fitting	92-828052A2
B	2-4-C Marine Lubricant With Teflon	Hinge Pins	Grease fitting	92-802861Q1

Power Steering Fluid

Checking

IMPORTANT: Use only Power Trim and Steering Fluid or automatic transmission fluid (ATF) Dexron III in power steering system.

ENGINE WARM

1. Stop engine and center sterndrive unit.
2. Remove dipstick from power steering reservoir and note fluid level.
3. Level should be between the FULL HOT mark and ADD mark on dipstick.

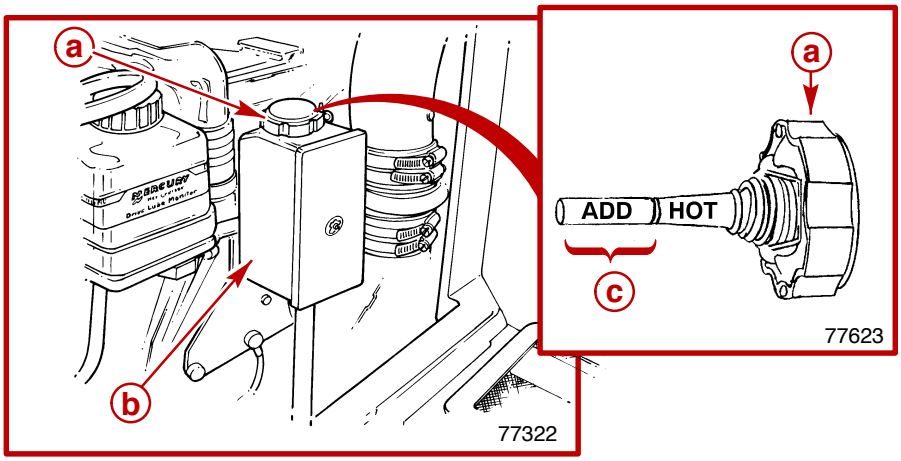

a - Dipstick
b - Power Steering Reservoir
c - Proper Fluid Level With Engine Warm

4. If level is below marks, but fluid is visible in reservoir, add fluid to bring level up to FULL HOT mark on dipstick. DO NOT overfill.
5. If fluid is not visible in reservoir, a leak exists in the power steering system. Find and correct the cause.

ENGINE COLD

1. With engine stopped, center sterndrive unit.
2. Remove dipstick from power steering fluid reservoir and observe fluid level.
3. Level should be between FULL COLD mark and bottom of dipstick.

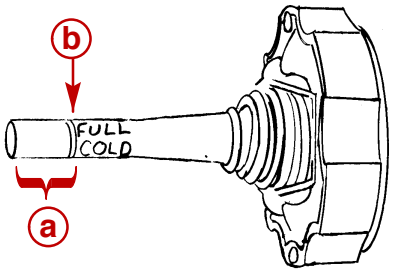

77569

a - Proper Fluid Level With Engine Cold
b - FULL COLD Fluid Level

4. If level is below bottom of dipstick, but fluid is still visible in pump reservoir, add required amount of fluid to bring level up to FULL COLD mark on dipstick. DO NOT overfill.
5. If fluid is not visible in reservoir, a leak exists in the power steering system. Find and correct the cause.

Filling and Bleeding

1. With engine stopped, center sterndrive unit.
2. Remove dipstick from power steering reservoir.

IMPORTANT: Use only Power Trim and Steering Fluid or Dexron III automatic transmission fluid (ATF) in power steering system.

3. Add fluid to bring level up to FULL COLD mark on dipstick.

IMPORTANT: All air must be removed from the system or fluid in pump may foam during operation and be discharged from pump reservoir. Foamy fluid also may cause power steering system to become spongy, which may result in poor boat control.

4. With engine stopped, turn the steering wheel at a moderate rate, to end of travel in each direction, pausing a few seconds at end of travel to allow any air to bubble from pump reservoir. Do this a minimum of 5 complete cycles, then recheck fluid level and add fluid, if necessary.
5. Install dipstick.

⚠ CAUTION

Supply water to seawater pickup pump before operating engine to prevent pump impeller damage and subsequent overheating of engine.

6. Supply cooling water to water inlet openings on sterndrive unit.
7. Start engine and operate at IDLE until engine reaches normal operating temperature. During this time, slowly turn steering wheel to end of travel in each direction several times.

IMPORTANT: Sterndrive unit must be centered and power steering fluid must be hot to accurately check fluid level.

8. With engine stopped, center sterndrive unit. Remove dipstick from pump reservoir. Allow any foam in pump reservoir to disperse, then check fluid level. DO NOT overfill.
9. Install dipstick.
10. If fluid is still foamy in Step 8., repeat Steps 6. and 7. until fluid does not foam and level remains constant.

Power Trim Fluid

Checking

1. Place sterndrive unit in full DOWN/IN position.

IMPORTANT: Some trim pump reservoir fill caps have a small vent hole. Occasionally ensure vent is not restricted.

2. Unscrew reservoir cap.
3. Remove and discard cap plug if present.

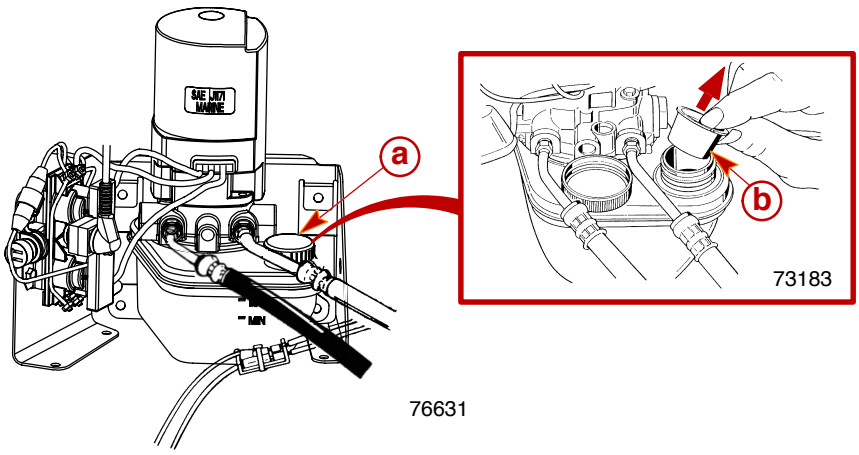

a - Reservoir Cap
b - Cap Plug

4. Observe oil level. Level must be up to, but not over, bottom edge of reservoir fill neck.

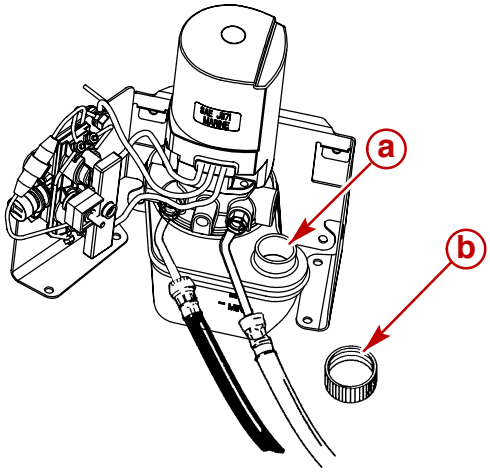

a - Reservoir Fill Neck
b - Reservoir Cap

Filling

1. Add Power Trim and Steering Fluid or SAE 10W-30 motor oil to bring oil to proper level.
2. Install reservoir cap.

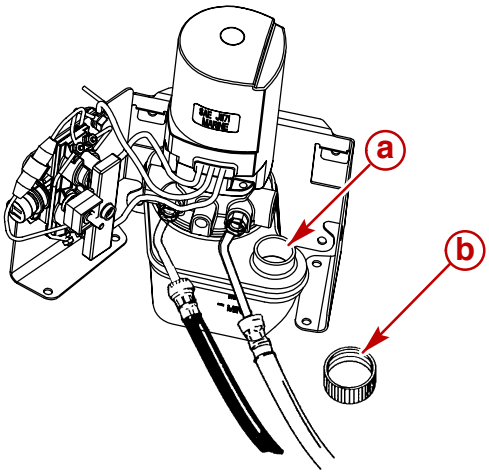

77348

a - Reservoir Fill Neck
b - Reservoir Cap

Drive Lube Monitor

Checking

NOTE: *Oil level in drive lube monitor will fluctuate during operation. Oil level should be checked with engine cold.*

1. Check for water at bottom of monitor, or milky-tan appearance. Both conditions indicate a water leak somewhere in the sterndrive unit. Find and correct the cause.
2. Check drive lube monitor oil level. Keep oil level at or near OPERATING RANGE (FULL) line and never below the ADD line.

Filling

1. Remove cap.
2. Add High Performance Gear Lube to monitor as needed.

IMPORTANT: If more than 57 grams (2 oz.) of High Performance Gear Lube are required to fill drive lube monitor, a seal may be leaking. Damage to unit may occur due to lack of lubrication.

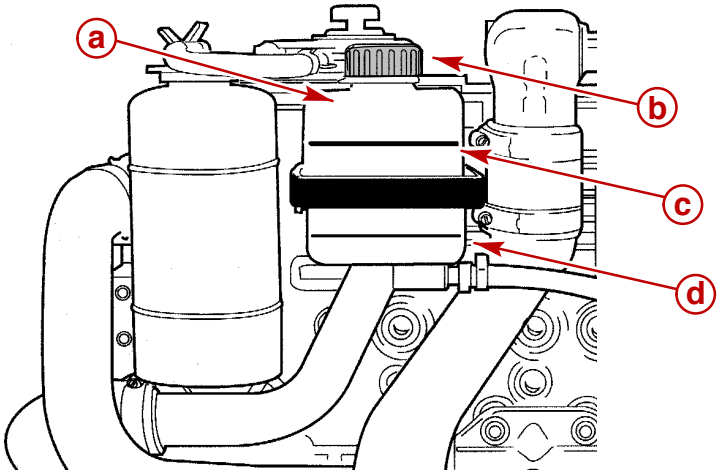

77335

a - Drive Lube Monitor
b - Cap
c - OPERATING RANGE (FULL) Line
d - ADD Line

3. Install cap.

Drive Belts

General Information

Belt and pulley replacement guidelines:

- During belt assembly, do not force belt into pulley grooves by prying with a screwdriver, pry bar or similar. This will damage belt side cords, which will cause belt to turn over in pulley grooves, and result in complete destruction of belt.
- Do not use belt dressing.
- Always check condition of remaining belts. Replace belt if worn, cracked, grease-soaked or oil-soaked.
- When replacing belt and pulley, pulley alignment must be checked under tensioned condition (brackets securely clamped). A misalignment that can be detected by visual inspection is detrimental to belt performance.
- Except for belts controlled by an automatic tensioner, if a belt is disturbed for any reason, it must be tensioned to the correct tension.
- Replace pulleys if worn or clean if still suitable for service.
- On some engines it may be necessary to remove other drive belts to gain access to a particular belt during replacement. Refer to appropriate sections for information concerning individual drive belts and proceed accordingly.

Inspection

⚠ WARNING

Avoid possible serious injury. Ensure engine is shut off and ignition key is removed before inspecting belts.

1. Visually inspect all drive belts for cracks, glazing, fraying or separation.
2. Check operation of the automatic tensioner and associated components. Position a suitable tool on pulley fastener and rotate (move) tensioner pulley in direction of arrow. Release and allow to glide back slowly. Tensioner must return to initial position.

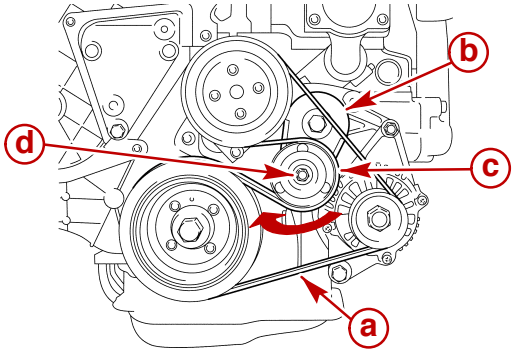

77139

Typical

a - Drive Belt
b - Automatic Tensioner
c - Pulley
d - Pulley Fastener

Serpentine Belt

1. Remove power steering belt, if equipped.
2. Position a suitable tool on pulley fastener and rotate (move) tensioner pulley in direction of arrow.
3. Remove old belt.
4. Install new serpentine belt. Follow directions for rotation, if indicated on belt.

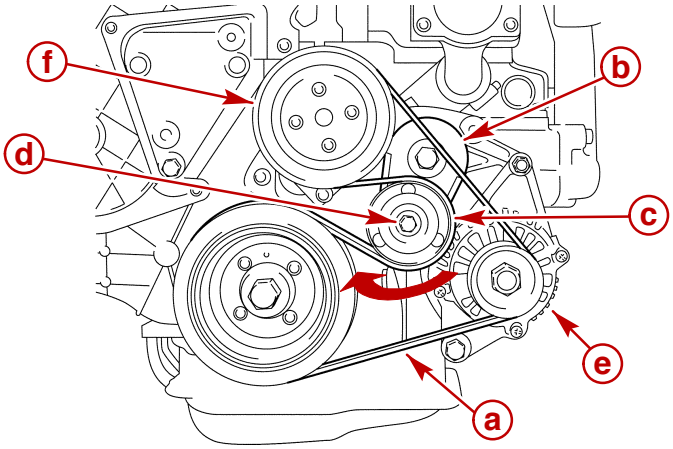

77139

Typical

a - Serpentine Belt
b - Automatic Tensioner
c - Pulley
d - Pulley Fastener
e - Alternator
f - Water Pump Pulley

5. Release pulley and allow tensioner to glide back slowly. Tensioner must return to initial position.
6. Ensure belt is positioned properly on pulleys.
7. Install power steering belt, if equipped.

Power Steering Pump Belt (If Equipped)

1. Loosen the pump front mounting bolt and the brace bolts.
2. Pivot the power steering pump to loosen belt.

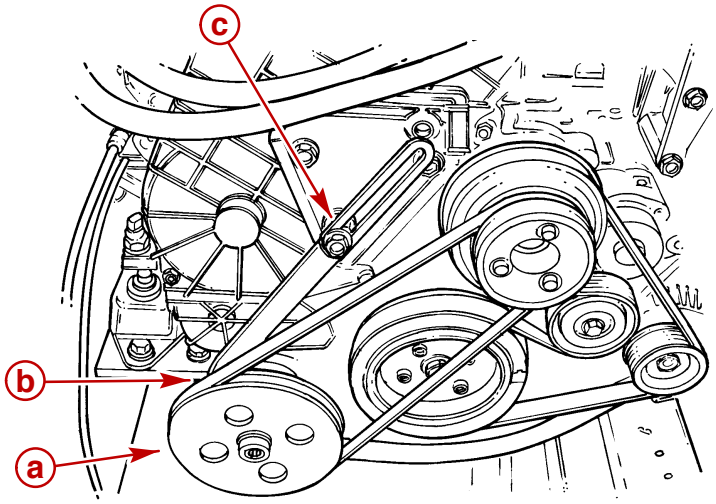

a - Front Mounting Bolt (Hidden)
b - Brace Lower Bolt
c - Brace Upper Bolt

3. Remove old power steering belt and install new belt.
4. Pivot the power steering pump to adjust belt. Approximately 5 mm (3/16 in.) deflection should be measured at midpoint between the pulleys on the longest span.
5. Torque brace bolts and pump front mounting bolts.

Description		Nm	lb-in.	lb-ft
Bolt, Pump Mounting, Front	M8x1.25x25	21		15
Bolt, Brace Lower	M8x1.25x25	21		15
Bolt, Brace Upper	M10x1.5x40	34		25

Exhaust Elbow Clamp

1. After the first 50 hours of operation, torque clamp nut.
2. Torque clamp nut every 200 hours or annually, whichever occurs first.

Description	Nm	lb-in.	lb-ft
Nut, Exhaust Elbow-To-Turbocharger Clamp	10	89	

Air Cleaner

The air cleaner is used to prevent the entry of rain water, seawater and debris. No routine or scheduled maintenance is required and there are no serviceable parts to the air cleaner.

1. Ensure that the air cleaner is mounted (clamped) securely at all times.
2. Remove any debris present at openings. Replace the assembly if cracked or damaged.

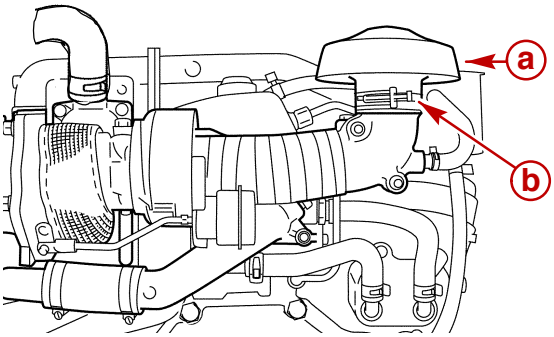

77132

a - Air Cleaner
b - Clamp

3. Ensure proper condition of connecting hoses and clamps.

Intercooler Draining

1. Remove small condensate drain plug from intercooler.
2. Drain liquid that may have condensed in the intercooler during operation.
3. After intercooler has drained, apply sealer to threads of plug and install.
4. Tighten plug securely.

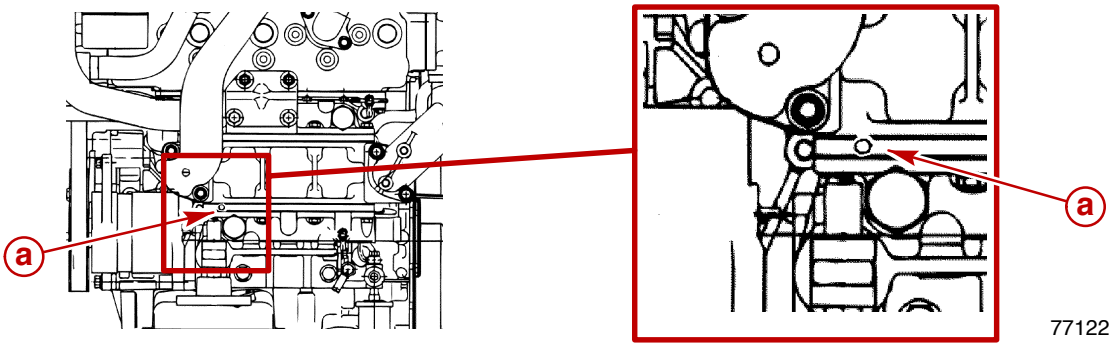

77122

a - Condensate Drain Plug

Description	Where Used	Method of Use	Part Number
Perfect Seal	Drain plug	Thread length	92-34277--1

Battery

1. Ensure battery connections are clean and tight.
2. Keep exterior surfaces of battery wiped clean with a water/baking soda solution.
3. Ensure battery is securely fastened in place.
4. Refer to battery manufacturer's recommendations for fluid level and charging.

Charging System

⚠ CAUTION

Remove all battery cables from battery (before conducting the following check) to prevent accidentally causing a short circuit in the electrical system.

1. Inspect entire charging system for loose, damaged or corroded connectors.
2. Check wiring for frayed or worn insulation.
3. Check alternator mounting bolts for adequate tightness.
4. Check alternator sterndrive belt for excessive wear, cracks, fraying and glazed surfaces.
5. Check operation of automatic belt tensioner.

Corrosion and Corrosion Protection

1. After first cleaning all surfaces, check all metal surfaces and touch up with Paint.
2. To maintain a protective coating on all metal surface areas, spray with Corrosion Guard.

NOTICE

For additional information on sterndrive unit corrosion protection and external corrosion protection refer to appropriate Mercury MerCruiser Sterndrive Service Manual.

Saltwater Operation

Seawater section must be flushed after each saltwater use. Refer to Seawater Cooling System - Flushing.

Freezing Temperature and Cold Weather Operation

IMPORTANT: If boat is operated during periods of freezing temperature, precautions must be taken to prevent freeze damage to power package. Refer to the following and to Cold Weather or Extended Storage for related information and draining instructions.

⚠ CAUTION

Seawater (raw water) section of cooling system MUST BE COMPLETELY drained for winter storage or immediately after cold weather use, if the possibility of freezing temperatures exist. Failure to comply may result in trapped water causing freeze and/or corrosion damage to engine.

1. At the end of operations each day, COMPLETELY drain seawater section of the cooling system and the seawater strainer to protect against damage by freezing. Refer to SECTION 6A.

⚠ CAUTION

If boat is in the water, seacock (water inlet valve), if equipped, must remain closed until engine is to be re-started to prevent water from flowing back into seawater cooling system. If boat is not fitted with a seacock, water inlet hose must be left disconnected and plugged to prevent water from flowing into cooling system and/or boat. As a precautionary measure, attach a tag to the ignition switch or steering wheel with the warning that the valve must be opened or the water inlet hose reconnected prior to starting the engine.

2. At the end of operation each day, drain water from water separating fuel filter. Fill fuel tank at end of operation each day to prevent condensation.
3. Closed cooling section of engine must be filled with Premixed Marine Engine Coolant, a mixture of anti-freeze/water solution sufficient to prevent freezing to the coldest temperature of the area.
4. Be sure to use proper cold weather lubrication oil.
5. Make certain that the battery is of sufficient size and is fully charged. Ensure that all other electrical equipment is in optimum condition.
6. At temperatures of –20° C (–4° F) and below, it is recommended that you use a crankcase mounted coolant heater to improve cold starting.
7. If operating in arctic temperatures of –29° C (–20° F) or lower, consult Mercury MerCruiser for information about special cold weather equipment and precautions.

Cold Weather or Extended Storage

Power Package Layup

IMPORTANT: Mercury MerCruiser strongly recommends that this service be performed by an Authorized Mercury MerCruiser Dealer. Damage caused by freezing IS NOT covered by the Mercury MerCruiser Limited Warranty.

⚠ CAUTION

The engine must be prepared for long storage periods to prevent internal corrosion and severe damage.

⚠ CAUTION

DO NOT operate engine without water flowing through the seawater pickup pump, as pump impeller may be damaged and subsequent overheating damage to engine or sterndrive unit may result.

IMPORTANT: If boat has already been removed from water, before starting engine a source of water must be supplied to water intake openings. Refer to Flushing Cooling System.

1. Supply cooling water to water inlet openings on sterndrive unit.
2. Start engine and operate until it reaches normal operating temperature. Stop engine.
3. Change oil and filter.
4. Start engine and operate for about 15 minutes. Ensure there are no oil leaks.
5. Flush cooling system. Refer to Flushing Seawater Section of cooling system.

DRAINING INSTRUCTIONS

IMPORTANT: Drain seawater section of closed cooling system only.

IMPORTANT: Closed cooling section must be kept filled year-round with the specified coolant.

IMPORTANT: Do not use Propylene Glycol anti-freeze in the closed cooling section of the engine.

1. Ensure that engine is as level as possible to ensure complete draining of cooling system.

⚠ CAUTION

If boat is to remain in the water, seacock must remain closed until engine is to be restarted to prevent water from flowing back into seawater cooling system. If boat is not fitted with a seacock, water inlet hose must be disconnected and plugged to prevent water from flowing into cooling system and/or boat. As a precautionary measure, attach a tag to the key switch or steering wheel with the warning that the seacock must be opened or the water inlet hose reconnected prior to starting the engine.

2. Close seacock, or disconnect and plug seawater inlet hose if boat is to remain in the water.

⚠ CAUTION

Avoid damage to heat exchanger and subsequent possible engine damage. Remove all water from heat exchanger sections. Failure to do so could cause corrosion or freeze damage to heat exchanger water passage tubes.

3. Remove drain plug from front cover of heat exchanger.

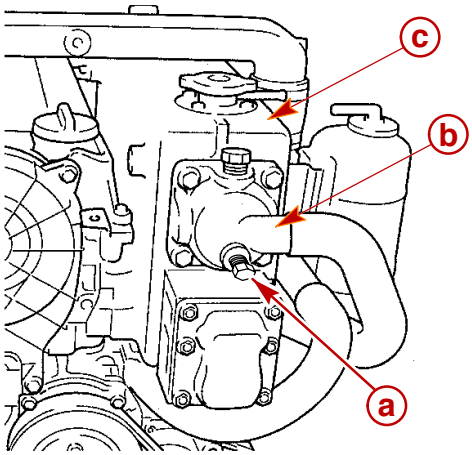

77144

a - Drain Plug
b - Front Cover
c - Heat Exchanger

4. Remove drain plug from lower part of intercooler.

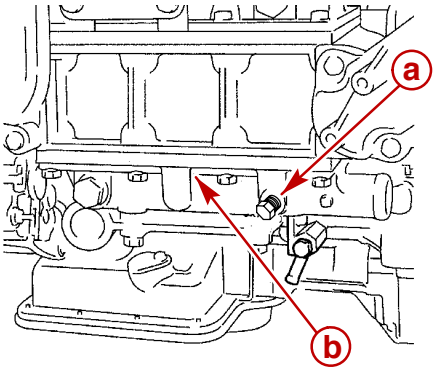

77143

a - Drain Plug
b - Intercooler

5. Repeatedly clean out drain holes using a stiff piece of wire until entire system is drained.
6. Insert a small wire (repeatedly) to make sure that speedometer pitot tube, trim tab/anode cavity vent hole and trim tab/anode cavity drain passage are unobstructed and drained.

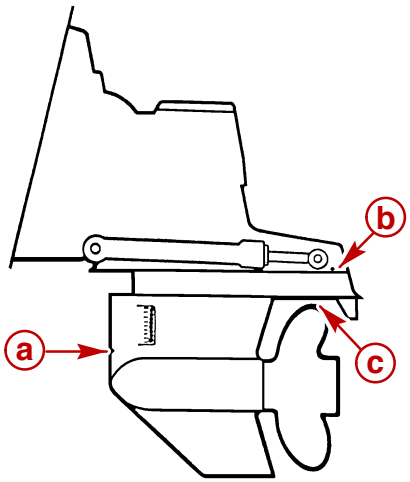

71217

a - Speedometer Pitot Tube
b - Vent Hole
c - Drain Passage

7. After seawater section of cooling system has been drained completely, coat threads of drain plugs with Perfect Seal and reinstall. Tighten securely.

Description	Where Used	Method of Use	Part Number
Perfect Seal	Drain plugs	Thread length	92-34277- - 1

8. After draining, perform all checks, inspections, lubrication and fluid changes outlined in Maintenance Schedules.
9. Clean seawater strainer, if equipped.
10. Clean engine and coat with Corrosion Guard.

Description	Where Used	Method of Use	Part Number
Corrosion Guard	Engine	Coat Surfaces	92-802878 55

11. Lubricate all cables and linkages.
12. Remove and store battery in a cool, dry place. Do not store on a concrete surface or on the ground. Place on a dry, wood board or a thick plastic base (refer to battery manufacturer's instructions).

⚠ CAUTION

Sterndrive unit should be stored in full DOWN / IN position. Universal Joint bellows may develop a set if unit is stored in raised position and may fail when unit is returned to service.

13. Place sterndrive unit in the full DOWN / IN position.

Recommissioning

⚠ WARNING

To prevent possible injury or damage to equipment, do not install battery until all maintenance has been performed on engine.

1. Ensure that all cooling system hoses are in good condition, connected properly and hose clamps are tight. Verify that all drain plugs are installed and tight.
2. Replace fuel filter.
3. Bleed fuel system.

⚠ CAUTION

When installing battery, be sure to connect POSITIVE (+) battery cable to POSITIVE (+) battery terminal FIRST and NEGATIVE (–) battery cable to NEGATIVE (–) battery terminal LAST. If battery cables are reversed, or connection order is reversed, electrical system damage will result.

4. Install fully charged battery. Clean battery cable clamps and terminals and reconnect cables (refer to **CAUTION** listed above). Secure each cable clamp when connecting. Coat terminals with a battery terminal anti-corrosion spray to help retard corrosion.
5. Perform all checks in the Starting Procedure column of the Operation Chart found in the Operation, Maintenance and Warranty Manual provided with the product.

⚠ CAUTION

DO NOT operate engine without water flowing through seawater pickup pump, as pump impeller may be damaged and subsequent overheating damage to engine or sterndrive unit may result.

IMPORTANT: If boat has been removed from water, before starting engine a source of water must be supplied to water inlet openings. Follow all Warnings and flushing attachment procedures stated in Flushing Cooling System.

6. Supply cooling water to water inlet openings on sterndrive unit.

IMPORTANT: After not having been operated for two months or longer, it is necessary to pre-lubricate the engine. To do this, engage the STOP switch and HOLD engaged while you simultaneously turn the key switch to START position for 15 seconds. This will rotate the starter motor and engine/oil pump. During this process the engine will not run because no fuel is injected. Allow the starter motor to cool down for one minute and repeat the above described process. To avoid overheating the starter motor, do not engage starter motor for more than 15 seconds each time.

7. Pre-lubricate the engine if necessary.
8. Start engine and closely observe instrumentation to make sure that all systems are functioning correctly.
9. Carefully inspect engine for fuel, oil, fluid, water and exhaust leaks.
10. Check steering system, shift and throttle control for proper operation.

THIS PAGE IS INTENTIONALLY BLANK

IMPORTANT INFORMATION

Section 1C - Troubleshooting

1 C

Table of Contents

Precautions

⚠ WARNING

Always disconnect battery cables from battery BEFORE working on fuel system to prevent fire or explosion.

⚠ WARNING

Always disconnect battery cables from battery before working around electrical system components to prevent injury to yourself or damage to electrical system.

⚠ WARNING

Be careful when changing fuel system components; diesel fuel is flammable. Be sure that ignition key is OFF. DO NOT smoke or allow sources of spark or flame in the area while changing fuel system components. Wipe up any spilled fuel immediately. DO NOT allow fuel to come into contact with any hot surface which may cause it to ignite.

⚠ WARNING

Avoid diesel fuel fire or explosion. Improper installation of fittings or plugs into fuel filter base can crack casting and/or cause a fuel leak.

⚠ WARNING

FIRE HAZARD: Fuel leakage from any part of the fuel system can be a fire hazard which can cause serious bodily injury or death. Careful periodic inspection of entire fuel system is mandatory, particularly after storage. All fuel components including fuel tanks, whether plastic, metal or fiberglass, fuel lines, primers, fittings, and fuel filters should be inspected for leakage, softening, hardening, swelling or corrosion. Any sign of leakage or deterioration requires replacement before further engine operation.

⚠ WARNING

Dispose of fuel-soaked rags, paper, etc., in an appropriate air tight, fire retardant container. Fuel-soaked items may spontaneously ignite and result in a fire hazard which could cause serious bodily injury or death.

⚠ WARNING

Make sure no fuel leaks exist before closing engine hatch.

⚠ WARNING

When operating engine with boat out of water, be certain that area in vicinity of propeller is clear and that no person is standing nearby. As a precautionary measure, it is recommended that the propeller be removed.

⚠ WARNING

DO NOT leave helm unattended while performing idle speed adjustment.

⚠ WARNING

Safety glasses should be worn while working on fuel injection system. The fuel injection pump will generate pressures in excess of 13790-27580 kPa (2000-4000 psi). Use caution when removing injectors, injector lines or bleeding air from injection system.

⚠ CAUTION

DO NOT operate engine without water being supplied to seawater pickup pump, or pump impeller may be damaged and subsequent overheating damage to engine may result. Engine may be operated with boat out of water, if instructions for operating engine with boat out of water, below, are followed.

⚠ CAUTION

DO NOT run engine above 1500 rpm, as suction created by seawater pickup pump may collapse water supply hose and cause engine to overheat.

Poor Boat Performance And/Or Poor Maneuverability

Symptom	Cause
1. Bow too low	1. A. Improper drive unit trim angle B. Improper weight distribution C. Boat is underpowered D. Permanent or power hook in boat bottom E. False bottom full of water F. Improperly adjusted trim tabs (after planes)
2. Bow too high	2. A. Improper drive unit trim angle B. Propeller pitch too great C. Dirty boat bottom (marine growth) D. Engine operating poorly E. Improper weight distribution F. Rocker in boat bottom G. False bottom full of water H. Improperly adjusted trim tabs (after planes)
3. Propeller ventilating	3. A. Drive unit installed too high on transom B. Dirty or rough boat bottom C. Damaged propeller; pitch too small; diameter too small D. Keel located too close to propeller or too deep in the water E. Water pickup or accessories located too close to propeller F. Hook in boat bottom G. Propeller plugged up with weeds

Improper Full Throttle Engine RPM

RPM Too High

Cause	Special Information
1. Propeller	1. Damaged; pitch too low; diameter too small; propeller hub slipping
2. Boat	2. A. Water pickup or accessories mounted too close to propeller (ventilation) B. Keel located too close to propeller and/or too deep in the water (ventilation) C. Drive installed too high on transom D. Wrong gear ratio
3. Operation	3. Unit trimmed OUT too far
4. Engine coupler slipping	

RPM Too Low

Cause	Special Information
1. Propeller	1. Damaged; pitch too great; diameter too great
2. Boat	2. A. Dirty or damaged bottom B. Permanent or power hook in bottom C. False bottom full of water D. Drive installed too low
3. Operation	3. Drive unit trimmed IN too far

Engine Cranks Over But Will Not Start Or Starts Hard

Electrical

Cause	Special Information
1. Battery, electrical connections, wiring	1. Loose or damaged
2. Key switch defective.	2. Refer to SECTION 4D.
3. Glow plugs (if equipped) inoperative	3. Refer to SECTION 4C.

Fuel System

Cause	Special Information
1. Empty fuel tank	
2. Fuel shutoff valve closed (if equipped)	
3. Anti-siphon valve stuck closed (if equipped)	3. Restricting fuel supply
4. Low grade, stale fuel or water in fuel	
5. Fuel waxing or frozen water separator (cold weather)	
6. Plugged fuel suction line or water separating fuel filter	
7. Air leaks, suction side fuel line or water separating fuel filter	7. Sucks air into fuel system reducing fuel volume
8. Plugged or pinched fuel line (feed or return)	
9. Fuel tank vent plugged	9. Engine will start initially. After a short time of operation, engine will stall and will not restart for a period of time. Loosen filler cap to act as a vent and operate engine to verify.
10. Injection pump fuel solenoid valve	10. Refer to SECTION 5C.
11. Injection timing	11. Worn or damaged timing belt or pulleys, or improperly tensioned timing belt
12. Injector	12. Injector starting pressure too low or improper spray condition. Replace injector.

Miscellaneous

Cause	Special Information
1. Low grade or stale fuel	
2. Water in fuel	
3. Incorrect starting procedure	3. Refer to Operation, Maintenance and Warranty Manual
4. Internal mechanical damage (bent rods or similar)	
5. Low compression	5. Worn valves, rings, cylinder, or head gasket
6. Valve timing or valve clearance incorrect	6. Worn or damaged timing belt or pulleys, improperly tensioned timing belt or timing pulleys improperly installed; check and set valve clearance
7. Restricted or plugged exhaust	

Engine Will Not Crank Over Or Starter Inoperative

Cause	Special Information
1. Remote control lever not in neutral position	
2. Battery charge low; damaged wiring; loose electrical connections	
3. Circuit breaker tripped	
4. Blown fuse	
5. Key switch	
6. Starter relay	
6. Starter solenoid	
4. Internal mechanical damage	4. Bent rods, or similar

Charging System Inoperative

Cause	Special Information
1. Loose or broken drive belt	
2. Engine rpm too low on initial start	2. Rev engine to 1500 rpm.
3. Loose or corroded electrical connections	
4. Faulty battery gauge	4. Best way to test is to replace gauge.
5. Battery will not accept charge	5. Low electrolyte or failed battery.
6. Faulty alternator or regulator	6. Replace alternator.
7. Refer to Charging System for diagnostic procedures	

Noisy Alternator

Cause	Special Information
1. Loose mounting bolts	1. Torque fasteners if undamaged. Refer to SECTION 4B.
2. Drive belt	2. Replace belt if worn or frayed. If loose, inspect automatic tensioner.
3. Loose drive pulley	3. Torque fastener if undamaged. Refer to SECTION 4B.
4. Worn or dirty bearings	4. Replace alternator.
5. Faulty diode trio or stator	5. Replace alternator.
6. Faulty armature	6. Rubbing, broken wire. Replace alternator.

Engine Runs Poorly at Idle

Cause	Special Information
1. Clogged air cleaner	
2. Plugged fuel suction line or filter	
3. Air leaks: suction side fuel line, water separating fuel filter or loose intake manifold	
4. Water in fuel	4. Refer to SECTIONS 1B and 5.
5. Low grade or stale fuel	5. Drain fuel tank. Refer to SECTION 1B - Fuel. Refill tank with proper fuel.
6. Fuel waxing or frozen water separating fuel filter (cold weather)	
7. Valve clearance	7. Valve clearance improperly adjusted; adjust valve clearance
8. Restricted or plugged exhaust	
9. Injectors not functioning properly	9. Refer to SECTION 5B
10. Injection pump timing incorrect	10. Worn or damaged timing belt or pulleys, improperly tensioned timing belt or timing pulleys improperly installed
11. Low compression	11. Check for defective (blown) head gasket or broken piston rings
12. Water leaking into cylinders	12. Defective head gasket, exhaust manifold, cracked head or intercooler core leaking
13. Loose or broken engine mounts	
14. Injection pump incorrect	14. Worn or damaged injection pump internal components. Replace pump.

Engine Runs Poorly At High RPM

Cause	Special Information
1. Also refer to Poor Boat Performance	
2. Crankcase overfilled with oil	2. Check oil level with boat at rest in the water
3. Anti-siphon valve (if equipped)	3. Restricting fuel supply
4. Plugged fuel tank vent	4. Loosen filler cap to act as a vent and operate engine to verify.
5. Low fuel supply	
6. Clogged fuel filter	6. Replace fuel filter
7. Low grade of fuel or water in the fuel	7. Drain fuel tank. Refer to SECTION 1B - Fuel. Refill tank with proper fuel. Drain or replace filter.
8. Obstructed or kinked fuel lines	
9. Engine overheating	9. Refer to Engine Overheats in this section
10. Injectors not functioning properly	10. Refer to SECTION 5E
11. Injection timing	11. Injection pump timing incorrect
12. Valve clearance or valve springs weak or broken	12. Adjust valve clearance or repair worn or damaged valve components
13. Low compression	13. Worn valves, rings, cylinders
14. Restricted or plugged exhaust	
15. Insufficient engine compartment ventilation	15. Increase engine compartment ventilation
16. Injection pump incorrect	16. Worn or damaged injection pump internal components. Replace pump.
17. Turbocharger	17. Boost compensator hose broken or disconnected, intake or exhaust leaks, defective waste gate device, defective turbocharger

Poor Fuel Economy

Cause	Special Information
1. Fuel leaks	
2. Operator habits	2. Prolonged idling; slow acceleration; failure to cut back on throttle once boat is on plane; boat over loaded; uneven weight distribution
3. Engine laboring	3. Bent, damaged, or wrong propeller. Water test boat for proper operating rpm at wide open throttle
4. Clogged air cleaner	4. Remove debris or obstruction from air cleaner
5. Engine compartment sealed too tight or insufficient engine compartment ventilation	5. Increase combustion air supply to engine
6. Boat bottom	6. Dirty (marine growth), hook, rocker
7. Turbocharger malfunction	
8. Improper fuel	
9. Crankcase ventilation system not working	
10. Engine operating too hot or too cold	
11. Plugged or restricted exhaust	
12. Engine	12. Low compression
13. Injectors not functioning properly	13. Refer to SECTION 5B
14. Injection pump timing incorrect	14. Refer to SECTION 5C

Engine Smoking

Black

Cause	Special Information
1. Overload	
2. Excessive idle time (slobber)	
3. Restricted air cleaner and / or intercooler	
4. Insufficient engine compartment ventilation	4. Increase combustion air supply to engine
5. Insufficient coolant temperature	5. Defective thermostat
6. Restricted or plugged exhaust	
7. Low boost pressure	7. Check turbocharger and related parts
8. Excessive fuel delivery	8. Refer to SECTION 5
9. Faulty injectors	9. Refer to SECTION 5
10. Injection timing incorrect	10. Adjust injection pump timing
11. Worn piston rings	

Blue

Cause	Special Information
1. Worn piston rings	1. Check compression
2. Sticking piston rings	2. Check compression
3. Crankcase overfilled - incorrect dipstick reading	
4. Leaking head gaskets	

White

Cause	Special Information
1. Engine overheating	
2. Air leaks, such as suction side of fuel line or water separating fuel filter	
3. Plugged fuel suction line or filter	
4. Restricted fuel return/excessive return line pressure	
5. Inoperative glow plug system, if equipped	5. Refer to SECTION 4C and 4E
6. Questionable fuel quality / water in fuel	6. Low cetane, refer to SECTION 1B. Replace fuel.
7. Injection pump timing incorrect	7. Reset injection pump timing, refer to SECTION 5C
8. Faulty injector or injectors	8. Refer to SECTION 5B
9. Low compression	
10. Leaking head gasket	

Exhaust Gas Temperature

High

Cause	Special Information
1. Excessive load	
2. Faulty wastegate device	
3. Faulty injectors	3. Refer to SECTION 5B
4. Injection pump timing incorrect	4. Adjust injection pump timing

Low

Cause	Special Information
1. Injection pump timing incorrect	1. Refer to SECTION 5C
2. Excessive idling time/light loads	

Turbocharger

Make certain that troubles are not due to engine components, especially to injection system, before troubleshooting turbocharger and/or carrying out corrective action on turbocharger.

Cause	Special Information
1. Smoke from exhaust	1. A. Not enough air getting to engine air intake B. Clogged air cleaner C. Boost pressure too low D. Refer to Engine Smoking (Black, Blue and/or White) troubleshooting
2. Loss of power	2. A. Not enough air getting to engine air intake B. Clogged air cleaner C. Boost pressure too low D. Poor lubrication of turbocharger E. Excessive oil residue buildup in compressor turbine housing F. Defective wastegate valve F. Rubbing of compressor or turbine impellers against housing G. Defective engine gaskets allowing air or fuel escape into exhaust or intake system
3. Unusual noises and vibrations at turbocharger	3. A. Poor lubrication of turbocharger B. Rubbing of compressor or turbine impellers against housing C. Defective engine gaskets allowing air or fuel escape into exhaust or intake system
4. Rubbing of compressor or turbine impellers against housing	4. A. Poor lubrication of turbocharger B. Low oil pressure at turbocharger C. Defective bearings in turbocharger
5. Oil leaking from compressor side	5. A. Clogged air cleaner B. Boost pressure too low

Engine Noise

IMPORTANT INFORMATION

No definite rule or test will positively determine source of engine noise; therefore, use the following information only as a general guide to engine noise diagnosis.

1. Determine if noise is timed with engine speed or 1/2 engine speed. Noises timed with engine speed are related to crankshaft, rods, pistons, piston pins and flywheel. Noises timed to 1/2 engine speed are valve train related.
2. The use of a stethoscope can aid in locating a noise source; however, because noise will travel to other metal parts not involved in the problem, caution must be exercised.
3. Try to isolate the noise to location in engine: front to back, top to bottom. This can help determine which components are at fault.
4. Sometimes noises can be caused by moving parts coming in contact with other components. Examples are: flywheel or coupler; exhaust flappers rattling against exhaust pipe; crankshaft striking (pan, pan baffle, or dipstick tube); and loose flywheel cover. In many cases if this is found to be the problem, a complete engine teardown is not necessary.
5. When noise is isolated to a certain area and component, removal and inspection will be required. Refer to proper sections of service manual for information required for service.
6. If noise cannot be distinguished between engine and sterndrive unit, remove sterndrive from boat. Run a water supply directly to engine. Run engine without the sterndrive unit to determine if noise is still there.

Cylinder Area

Location	Possible Causes
1. Cylinder area, may be confined to one cylinder or found in more than one cylinder, timed to engine speed	1. A. Sticking valve B. Carbon build-up C. Connecting rod or bearings installed wrong D. Bent connecting rod E. Piston F. Piston rings G. Piston pin H. Cylinder worn
2. Engine knocking	2. A. Faulty injector (white smoke) B. Worn delivery valve C. Wrong injection timing D. Incorrect valve lifter E. Tight piston pin F. Improper fuel

Valve Cover and Camshaft Area

Location	Possible Cause
1. Timed to 1/2 engine speed, noise could be confined to one cylinder or may be found in any multitude of cylinders	1. A. Improper valve clearance, refer to SECTION 3A B. Camshaft follower or shim C. Worn camshaft D. Sticking valve
2. Camshaft area, front of engine, timed to 1/2 engine speed	2. A. Camshaft timing pulley B. Injection pump C. Camshaft bearings D. Camshaft wear
3. Camshaft area, timed to 1/2 engine speed	3. A. Camshaft bearings
4. Camshaft area, throughout engine, timed to 1/2 engine speed	4. A. Loss of oil pressure B. Camshaft wear C. Camshaft bearings

Crankshaft Area

Location	Possible Causes
1. Crankshaft area, front of engine, timed to engine speed	1. A. Crankshaft timing pulley B. Oil Pump C. Rod bearing D. Main bearing
2. Crankshaft area, center of engine, timed to engine speed	2. A. Crankshaft striking baffle plate B. Rod bearing C. Main bearing
3. Crankshaft area, rear of engine, timed to engine speed	3. A. Loose flywheel cover B. Loose coupler or drive plate C. Loose flywheel D. Rod bearing E. Main bearing
4. Crankshaft area, throughout engine, timed to engine speed	4. A. Loss of oil pressure B. Rod bearings C. Main bearings

Miscellaneous

Cause	Special Information
1. Hissing	A. Leaking exhaust (manifolds or pipes) B. Loose cylinder heads C. Blown head gasket
2. Whistle	2. A. Intake pressure leak B. Dry or tight bearing in an accessory
3. Squeaks or squeals	3. A. Drive belt slipping B. Dry or tight bearing in an accessory (alternator or water pump) C. Parts rubbing together

Oil Pressure

Cause	Special Information
1. Measuring oil pressure	1. Use a good automotive oil pressure test gauge. Do not rely on the oil pressure gauge in the boat.
2. Check engine oil level with boat at rest in the water	2. Oil level should be between the “MIN” and “MAX” marks
3. Oil level in crankcase above FULL mark	3. May cause loss of engine rpm, oil pressure gauge fluctuation and drop in oil pressure
4. Oil level in crankcase below ADD mark	4. Low oil pressure; oil pressure gauge fluctuation; internal engine noise and/or damage
5. Change in oil pressure	5. This may be a normal condition. Oil pressure may read high in the cooler times of the day, and when engine is not up to operating temperature. As the air temperature warms up and engine begins operating at normal operating temperature, it is normal for oil pressure to drop.
6. Low engine oil pressure at idle	6. With modern engines and engine oils, low oil pressure readings at idle do not necessarily mean there is a problem. The reason for the drop in oil pressure is that engine heat causes an expansion of the internal tolerances in the engine and, also, the oil will thin out somewhat from heat.
7. Low engine oil pressure at idle after operating at a high rpm	7. Refer to No. 5 and 6, preceding
8. Boats with dual engines	8. It is not uncommon to see different oil pressure readings between the two engines, as long as both engines are within specifications. Differences in oil pressure can be attributed to differences in engine tolerances, gauges, wiring, senders, or similar
9. Boats with dual stations	9. Refer to No. 8. preceding

Low Oil Pressure

Cause	Special Information
1. Low oil level in crankcase	
2. Defective oil pressure gauge and/or sender	2. Verify with a test gauge
3. Thin or diluted oil	3. Oil broken down; contains water or fuel; wrong viscosity; engine operating too hot or too cold; excessive idling in cold water (condensation)
4. Faulty restricted oil filter	4. Replace oil filter
5. Faulty oil pressure relief or bypass valve	5. Valve stuck open; replace or repair
6. Oil pump	6. Relief valve stuck open; pickup tube restricted; worn parts in oil pump; air leak on suction side of oil pump or pickup oil tube
7. Oil leak can be internal or external	7. Oil passage plugs leaking, cracked or porous cylinder block
8. Excessive bearing clearance	8. Cam bearings, main bearings, rod bearings

High Oil Pressure

IMPORTANT: Oil pressure slightly higher than normal does not always indicate a problem. Oil viscosity and weather conditions could cause high oil pressure.

Cause	Special Information
1. Oil too thick	1. Wrong viscosity, oil full of sludge or tar
2. Defective oil pressure gauge and/or sender	2. Verify with a test gauge
3. Clogged or restricted oil passage	
4. Faulty oil pressure relief or bypass valve	4. Valve stuck closed; repair or replace

Excessive Oil Consumption

NOTE: *One quart (1 liter) of oil, or less, consumed in 15 hours of operation at WOT (especially in a new or rebuilt engine) is normal.*

Cause	Special Information
1. Oil leaks	1. Clean bilge, run engine with clean white paper on bilge floor, locate oil leaks
2. Oil too thin	2. Oil diluted or wrong viscosity
3. Oil level too high	
4. Drain holes in cylinder head plugged	4. Oil will flood valve guides
5. Defective valve stem seals	
6. Worn valve stems or valve guides	
7. Defective oil cooler	7. Crack in cooler tubes
8. Defective piston rings	8. Glazed, scuffed, worn, stuck, improperly installed; ring grooves worn; improper break-in; wrong end gap
9. Defective cylinders	9. Out of round, scored, tapered, glazed; excessive piston to cylinder clearance; cracked piston
10. Excessive bearing clearance	

Water / Coolant in Engine

IMPORTANT: Determine location of water in engine. This information can be of great help when trying to determine where the water came from and how it got into the engine. The three most common problems are water in crankcase oil, water on top of pistons, and water in crankcase oil and on top of pistons.

1. After locating water, remove all the water from the engine by removing all glow plugs or injectors and pumping cylinders out by cranking engine over.
2. Change oil and filter.
3. Start engine and see if problem can be duplicated. If problem can be duplicated, there more than likely is a mechanical problem. If the problem cannot be duplicated, the problem is either an operator error or a problem that exists only under certain environmental conditions.

- If water is contained to cylinders only, it is usually entering through the intake system, exhaust system or head gasket.
- If the water is contained to crankcase only, it is usually caused by a cracked or porous block, a flooded bilge or condensation.
- If the water is located in both the cylinders and the crankcase, it is usually caused by water in the cylinders getting past the rings and valves or complete submersion.

4. Check for corrosion in the intake manifold or exhaust manifolds. Rust in these areas will give clues if the water entered these areas.

Water / Coolant In Crankcase Oil

Cause	Special Information
1. Water in boat bilge	1. Boat has been submerged or bilge water was high enough to run in through dipstick tube
2. Water seeping past piston rings or valves	2. Refer to Water in Engine (Water On Top of Pistons)
3. Engine operating cold	3. Defective thermostat, missing thermostat; pro-longed idling in cold water
4. Intake manifold leaking near a water passage	
5. Injector sleeve or O-ring leaking into cylinder	5. Replace injector sleeve O–rings or sleeves, or both
6. Cracked or porous casting	6. Check cylinder head, cylinder block and intake manifold

Water / Coolant On Top Pistons

Cause	Special Information
1. Rain water running onto air cleaner	1. Hatch cover
2. Backwash through the exhaust system	
3. Improper engine or exhaust hose installation	3. Refer to exhaust specifications
4. Cracked exhaust manifold	
5. Improper manifold to elbow gasket installation	
6. Injector sleeve or O-ring leaking into cylinder	6. Replace injector sleeve O–rings or sleeves, or both
7. Loose cylinder head bolts	
8. Blown cylinder head gasket	8. Check for warped cylinder head or cylinder block
9. Cracked and leaking intercooler	9. Defective O-rings or tubes
10. Porous or cracked casting	10. Check cylinder heads/valve bridge cylinder block, and intake manifold

Engine Overheats

Cooling System

IMPORTANT: First verify if the engine is actually overheating or if the temperature gauge or sender is faulty.

Cause	Special Information
1. Seacock (seawater inlet valve) partially or fully closed, if equipped	1. Fully open seacock
2. Loose or broken serpentine belt	2. Replace belt and/or ensure automatic tensioner is working correctly
3. Low coolant level	
4. Antifreeze incorrect type or not mixed properly	4. Use low silicate type with special additives
5. Clogged or improperly installed sea strainer, if equipped	

Cooling System (continued)

Cause	Special Information
6. Loose hose connections between seawater pickup and seawater pump inlet	6. Pump will suck air; pump may fail to prime or will force air bubbles into cooling system
7. Seawater inlet hose kinked or collapsed	7. Inlet hose must be positioned to prevent kinks or restrictions.
8. Seawater pickup clogged	
9. Obstruction on boat bottom causing water turbulence	9. Obstruction will be in front of seawater pickup, causing air bubbles to be forced into cooling system
10. Defective thermostat	
11. Exhaust elbow water outlet holes plugged	
12. Insufficient seawater pump operation	12. Worn pump impeller
13. Obstruction in cooling system such as casting flash, sand, rust, salt or similar	13. Refer to water flow diagram
14. Engine water circulating pump defective	
18. Heat exchanger core or tubes plugged	

Engine Overheats (continued)

Mechanical

Cause	Special Information
1. Engine rpm below specifications at WOT (engine laboring)	1. Damaged or wrong propeller; growth on boat bottom; false bottom full of water
2. Incorrect injection pump timing	2. Injection pump timing too far advanced or retarded
3. Seawater pump impeller slipping	
4. Exhaust restriction	
5. Valve timing incorrect	5. Worn or damaged timing belt or pulleys improperly tensioned timing belt; or timing pulleys improperly aligned or installed
6. Insufficient lubrication to moving parts of engine	6. Defective oil pump, plugged oil passage, low oil level

Power Steering

Poor, Erratic or No Assist

Cause	Special Information
1. Drive belt	1. Worn, broken or out of adjustment
2. Low fluid level	
3. Air in system	3. Air leak in lines, pump or air from installation. Refer to SECTION 8A for bleeding procedure.
4. Leaking hoses	4. Refer to SECTION 8A for bleeding procedure.
5. Steering cables and/or steering helm	5. Cable or helm partially frozen from corrosion or rust; cable over-lubricated; improper cable installation
6. Binding in sterndrive unit	6. Refer to appropriate Sterndrive Service Manual
7. Restriction in hydraulic hoses	7. Causes a loss of pressure
8. Control valve not positioned properly, not balanced properly or the mounting nut is loose	
9. Mounting bracket adjusting screw loose or mounting tube is loose	
10. Faulty pump	10. Flow control valve may be sticking
11. Worn piston ring or scored housing bore in cylinder	11. Causes loss of pressure
12. Leaking valve body or loose fitting spool	

Noisy Pump

Cause	Special Information
1 Drive belt	1. Check belt tension
2. Low fluid level	
3. Air in fluid	3. Air leak in lines, pump, or air from installation
4. Faulty pump	4. Use stethoscope to listen for noise in pump
5. Restricted fluid passages	5. Kinks or debris in hoses or debris in passages
6. Stop nut adjusted improperly	6. Refer to appropriate Sterndrive Service Manual
7. Steering cables installed that do not meet BIA standards	7. Refer to appropriate Sterndrive Service Manual

Fluid Leaks

Cause	Special Information
1. Loose hose connections	1. Refer to SECTION 8A for bleeding instructions
2. Damaged hose	
3. Oil leaking from top of pump	3. System overfilled; fluid contains water; fluid contains air
4. Cylinder piston rod seal	
5. Faulty seals in valve	
6 Faulty seals or O-rings in pump	
7. Cracked or porous metal parts	

THIS PAGE IS INTENTIONALLY BLANK

THIS PAGE IS INTENTIONALLY BLANK

REMOVAL AND INSTALLATION

Section 2A - MCM (Sterndrive) Models

Table of Contents

Torque Specifications

Description	Nm	lb-in.	lb-ft
Sterndrive Unit Shift Cable End Guide Attaching Nut	Tighten nut until it contacts flat washer, then loosen 1/2 turn		
Remote Control Throttle Cable End Guide Attaching Nut	Tighten nut until it contacts flat washer, then loosen 1/2 turn		
Remote Control Throttle and Shift Cable Barrel Attaching Nut	Securely		
Power Trim Line Connections	14	125	
Rear Engine Mounts	51		37
Power Steering Fluid Hose Fittings (at Control Valve)	31		23
Sterndrive Unit Fasteners	68		50
Transom Assembly Fasteners	31		23
Seawater Pickup (Inlet) Fitting (on Gimbal Housing)	5	45	
Steering Cable Coupler Nut	47		35
Steering Cable Pivot Bolts	34		25
Alpha Propeller Nut (Minimum)	75		55

1. Check all trim line connection points for leaks. If fluid is visible at fittings, tighten fittings. Torque fittings to 14 Nm (125 lb-in.).

Tools

Description	Part Number
Quicksilver Engine Alignment Tool	91-805475A1
Quicksilver Center Lifting Eye Tool	91-863678
Shift Slide Stabilizer Tool	91-809815A1

Lubricants / Sealants / Adhesives

Description	Where Used	Method of Use	Part Number
Engine Coupler Spline Grease	Engine coupler, sterndrive unit splines	Coat sufaces	92-816391A4
2-4-C Marine Lubricant With Teflon	Throttle and shift cables, bell housing studs, propeller splines	Coat surfaces	92-825407A3
U-Joint and Gimbal Bearing Grease	U-joints and gimbal bearings	Grease fittings	92-828052A2
Special Lubricant 101	Exposed portion of steering cable and propeller shaft	Coat surfaces	92-13872A1
Power Trim and Steering Fluid	Power trim or steering fluid	Fill reservoir	92-90100A12
Dexron III - Automatic Transmission Fluid	Power steering fluid	Fill reservoir	Obtain Locally
Liquid Neoprene	Exposed terminals and connections	Light coating on surfaces	92-25711--3
Perfect Seal	Engine mounting nuts and bolts	Coat surfaces	92-34227-1
Premixed Marine Engine Coolant	Closed cooling system	Fill system	92-813054A2
Fleetguard Compleat (Product 91-50663 With DCA4 Additive)	Closed cooling system	Fill system	Obtain Locally
High Performance Gear Lube	Sterndrive system	Fill system	92-802854A1

Removal

IMPORTANT: Sterndrive unit must be removed prior to engine removal. Refer to appropriate Mercury MerCruiser Sterndrive Service Manual.

1. Disconnect battery cables from battery.
2. Remove sterndrive unit.
3. Remove engine mounted drive lube monitor.
4. Disconnect instrument extension harness connector plug from engine harness connector end.

⚠ WARNING

Be careful when changing fuel system components; diesel fuel is flammable. Be sure that the ignition key is OFF. DO NOT smoke or allow sources of open flame in the area while changing fuel system components. Wipe up any spilled fuel immediately. DO NOT allow fuel to come into contact with any hot surface which may cause it to ignite.

⚠ WARNING

Dispose of fuel-soaked rags, paper, etc., in an appropriate air tight, fire retardant container. Fuel-soaked items may spontaneously ignite and result in a fire hazard which could cause serious bodily injury or death.

5. Close fuel shut off valve, if equipped. Loosen hose clamps, then disconnect and suitably plug fuel lines to prevent fuel in tank from leaking into bilge.
6. Disconnect throttle cable from engine. Retain locknuts and hardware.
7. Disconnect trim sender wire connections from engine harness.

NOTE: *After wires are disconnected be sure to loosen them from clamps or tie straps retaining them to engine or hoses.*

8. Disconnect MerCathode wires from MerCathode controller mounted on engine.
9. Disconnect seawater inlet hose from engine, if not already.
10. Disconnect upper exhaust system hoses.
11. Remove both shift cables from shift plate. Retain locknuts and hardware.
12. Disconnect continuity circuit wire, any grounding wires and accessories connected to engine.
13. Disconnect and suitably plug fluid hoses from power steering control valve on transom.

⚠ CAUTION

Do not allow lifting sling to hook or compress engine components or damage may occur.

14. Support engine with suitable sling through lifting eyes on engine.
15. Remove front and rear engine mounting bolts. Retain hardware.

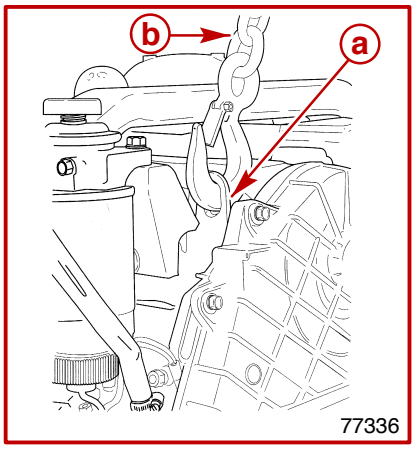

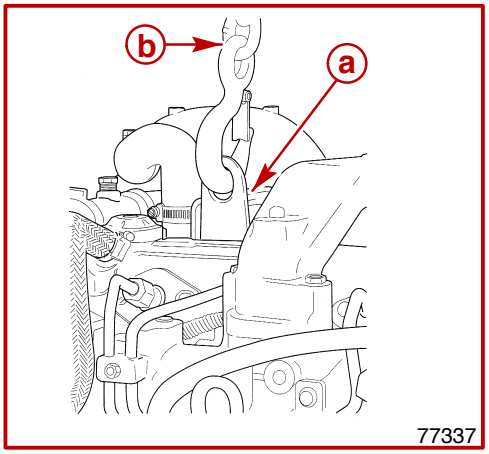

a - Engine Lifting Eyes
b - Suitable Sling

16. Carefully remove engine. DO NOT hit power steering control valve.

Installation

Engine Installation / Alignment

1. **On Engines Where Engine Mounts WERE Disturbed:** Ensure front mount adjusting nuts are positioned midway on studs so that adequate up and down adjustment exists for engine alignment.
2. Lubricate coupler splines with Engine Coupler Spline Grease.

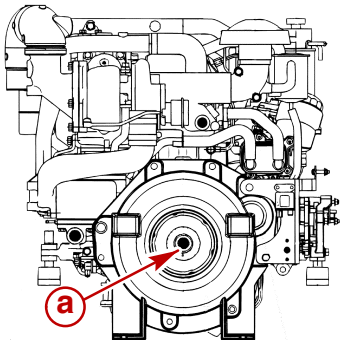

77122

a - Coupler Splines

3. Attach a suitable sling to lifting eyes on engine and adjust so that engine is level when suspended. Refer to Removal for location of engine lifting eyes.
4. Lift engine into position in boat using an overhead hoist.
5. Align rear engine mounts with inner transom plate mounts while simultaneously aligning exhaust system. DO NOT relieve hoist tension.

IMPORTANT: Engine attaching hardware must be installed in sequence.

6. Install both rear engine mounting bolts and hardware as shown. Torque bolts.

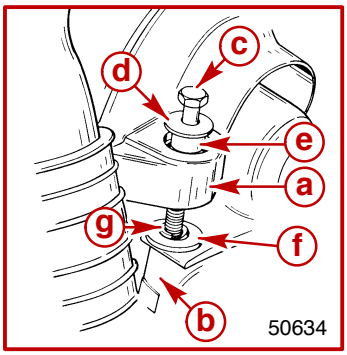

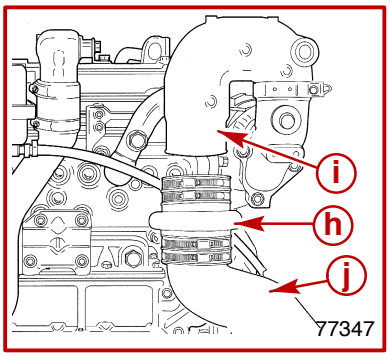

a - Rear Engine Mount
b - Inner Transom Plate Mount
c - Bolt
d - Washer
e - Spacer
f - Fiber Washer
g - Double-Wound Lockwasher
h - Exhaust Hose
i - Exhaust Elbow
j - Intermediate Exhaust Pipe

⚠ CAUTION

When lowering engine into position DO NOT set engine on shift cable. Shift cable outer casing can be crushed causing difficult or improper shifting.

7. Set engine on stringers.
8. Relieve hoist tension and disconnect sling from engine lifting eyes.

9. Install center lifting eye tool with an M10 x 1.5 x 20 mm long bolt obtained locally.

⚠ CAUTION

Center lifting eye is used for engine alignment only. Do not use to lift entire engine.

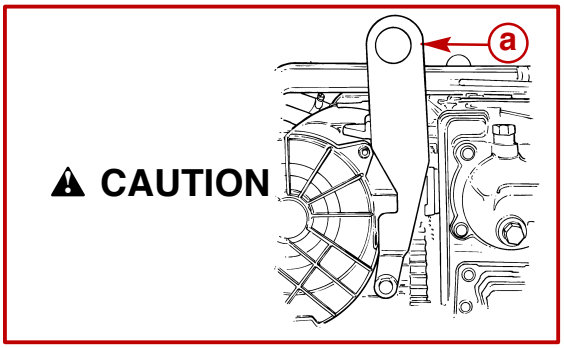

77352

a - Center Lifting Eye Tool
b - Lifting Eye Bolt

10. Move chain sling to center lifting eye tool.

⚠ CAUTION

DO NOT use an alignment tool from another manufacturer. Alignment tools other than Quicksilver Alignment Tool may cause improper alignment and damage to gimbal bearing and/or engine coupler.

⚠ CAUTION

To avoid damage to gimbal bearing, engine coupler or alignment tool:

- **DO NOT attempt to force alignment tool!**
- **DO NOT raise or lower engine with alignment tool inserted (or partially inserted) in gimbal bearing or engine coupler.**

11. Attempt to insert the solid end of the alignment tool through the gimbal bearing and into the engine coupler splines.

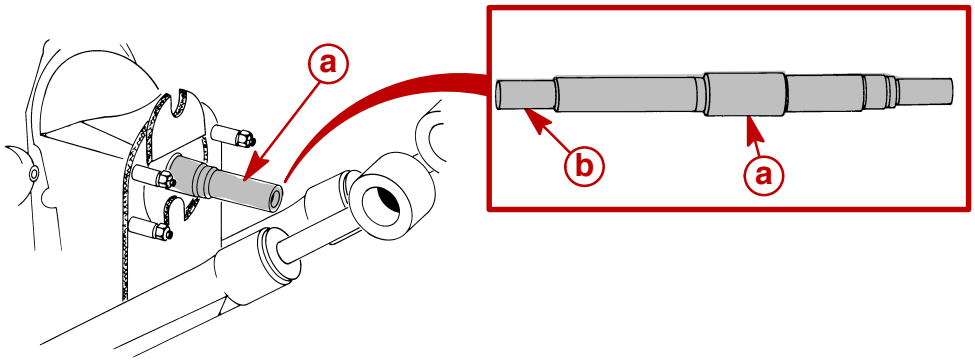

a - Alignment Tool (Use Only Recommended Quicksilver Alignment Tool)
b - Insert This End Of Alignment Tool Through Gimbal Housing Assembly

12. If the alignment tool does not fit, remove it and carefully adjust engine mounts as necessary:

    a. **To Adjust Engine Up or Down:** Loosen locknut on mounts. Turn adjusting nuts as necessary. Retighten locknuts.

IMPORTANT: Large diameter of mount trunion MUST NOT extend over 30 mm (1-5/32 in.) from edge of mount bracket to centerline of mount stud.

    b. **To Move Engine Left or Right:** Loosen trunion clamping bolt on both front mounts and move engine as necessary. DO NOT over-extend mount trunion. Retighten locking nuts.

NOTE: *A small amount of side-to-side adjustment can be obtained from the slots on the engine mount pads.*

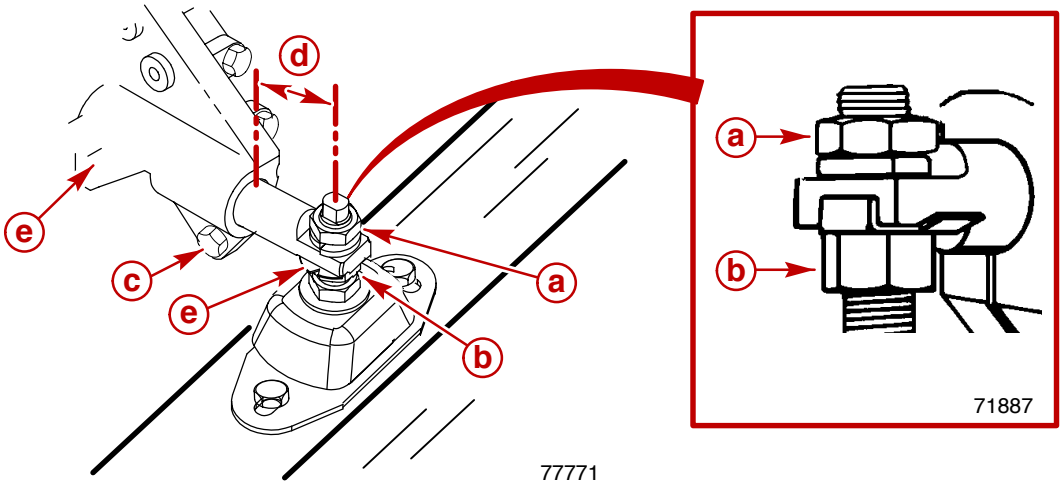

Starboard Front Mount (Port Similar)

a - Locknut
b - Adjusting Nut
c - Trunion Clamp Bolt
d - Mount Trunion Maximum Extension - 30 mm (1-5/32 in.)
e - Mount Bracket

13. Attempt to insert the alignment tool.
    a. Repeat steps 12. and 13., until the alignment tool installs easily **(SLIDES FREELY WITH TWO FINGERS)** all the way into and out of engine coupler splines. DO NOT check by turning.

NOTE: *This may require tapping the sides of the tool. DO NOT check by turning. By greasing the splines you can identify which side has interference.*

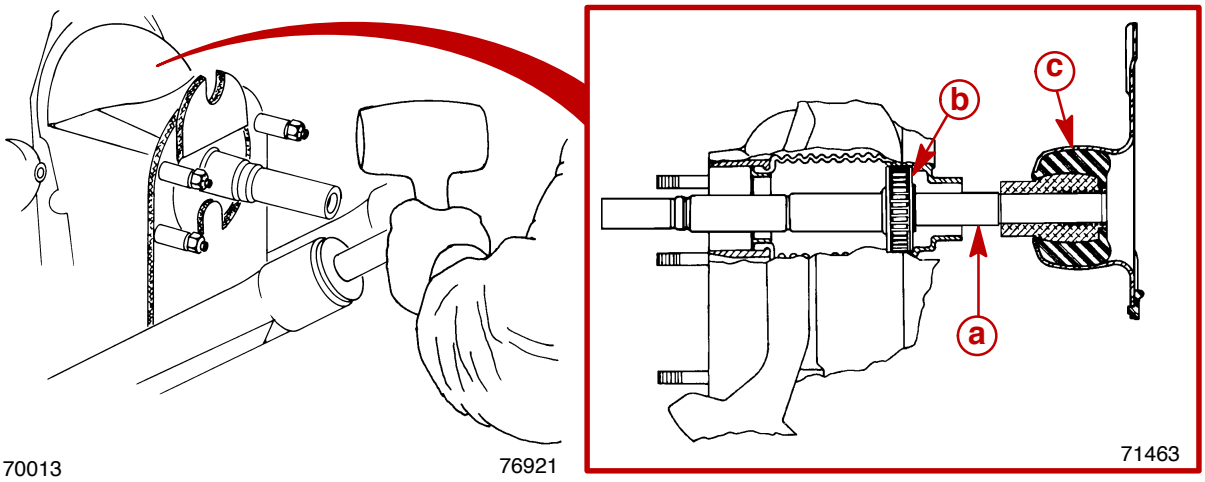

a - Alignment Tool
b - Gimbal Bearing
c - Engine Coupler

14. Relieve hoist tension entirely and fasten both front mounts to boat stringer using appropriate hardware.
15. Recheck alignment with alignment tool. Tool must enter coupler splines freely. If not, readjust front mounts.

IMPORTANT: Turn both front engine mount adjustment nuts an equal amount in direction required to align engine.

16. When alignment is correct, tighten locknut securely. Recheck alignment.
17. Torque locknuts to 80 Nm (59 lb-ft).
18. Bend tab washer down against flat on adjusting nut.
19. Torque trunion clamping bolts to 57 Nm (42 lb-ft).

NOTE: *If operating in a saltwater environment, apply Quicksilver Perfect Seal to threads and nuts to help protect against corrosion. This will allow for easier loosening in the future, if readjustment becomes necessary.*

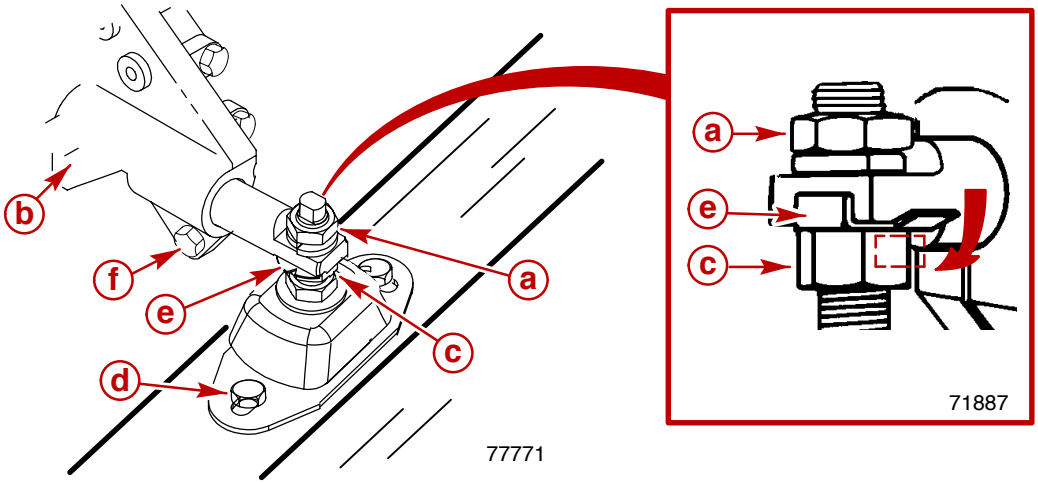

Starboard Front Mount (Port Similar)

- **a** - Locknut
- **b** - Mount Bracket
- **c** - Adjusting Nut
- **d** - Lag Screws (or Bolts)
- **e** - Tab Washer
- **f** - Trunion Clamp Bolt

20. Remove alignment tool and fold bell housing dust cover flap back into place and tape shut for boat shipment.
21. Remove chain sling from center lifting eye.
22. Remove center lifting eye tool from engine.
23. Install sterndrive unit. Refer to appropriate Mercury MerCruiser Sterndrive Service Manual.

Engine Connections

IMPORTANT: When routing all wire harnesses and hoses, ensure they are routed and secured to avoid coming in contact with hot spots and to avoid contact with moving parts.

1. Ensure seawater inlet hose is connected to water tube. Secure with hose clamp.

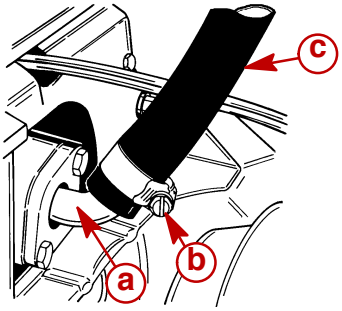

22055

a - Water Tube
b - Hose Clamp
c - Seawater Inlet Hose

2. Unplug and connect seawater inlet hose to intercooler. Secure with hose clamp.

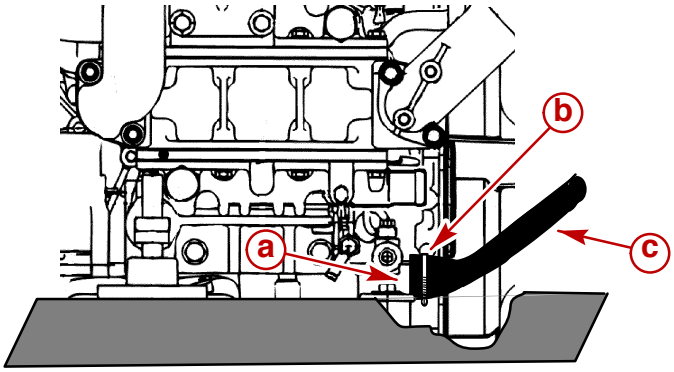

77767

a - Intercooler Water Inlet Fitting
b - Hose Clamp
c - Hose

⚠ CAUTION

Ensure drive lube monitor hose is not kinked when connecting in the following step. If hose is kinked, drive lube monitor will not function properly and damage to sterndrive could occur.

IMPORTANT: Hose should be routed directly to monitor to avoid low spots in the system.

3. Route drive lube monitor hose to monitor. Connect hose and secure with hose clamp.
4. Secure hose to transom with extra hose clips.
5. Secure hose to engine with tie straps.

IMPORTANT: Hose must not come in contact with steering system components, engine coupler or sterndrive shaft.

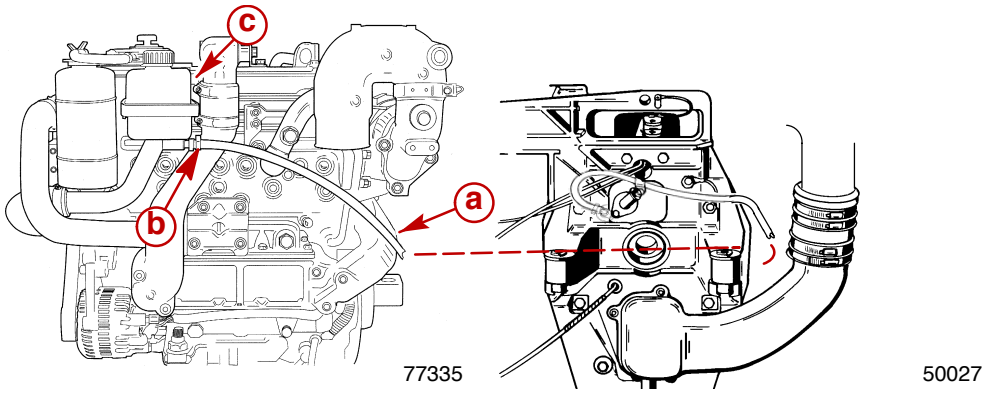

a - Hose
b - Connection With Hose Clamp
c - Drive Lube Monitor

6. Connect flexible fuel supply line to fuel inlet fitting at fuel filter housing. Secure with hose clamp.

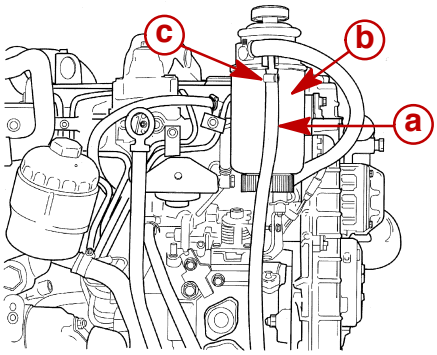

77343

a - Fuel Supply Line
b - Fuel Filter
c - Hose Clamp

7. Connect fuel return line to injection pump return fitting. Secure with hose clamp.

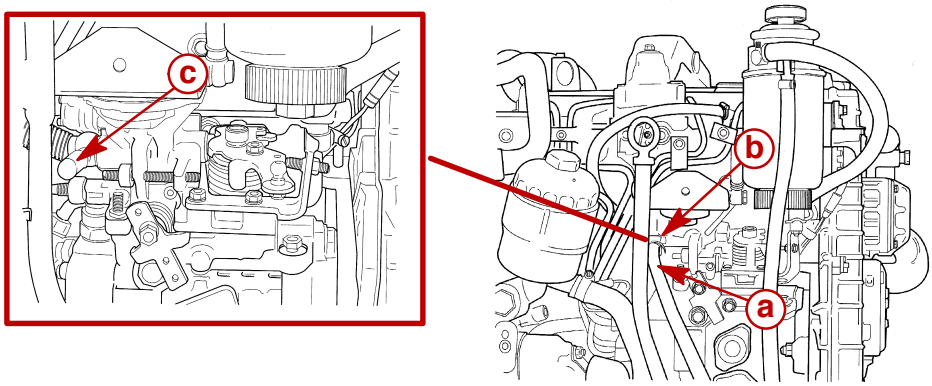

77343

a - Fuel Return Line
b - Hose Clamp
c - Return Fitting

8. Tighten all exhaust hose clamps securely.

⚠ CAUTION

Avoid exhaust hose failure. Discharge water from exhaust elbow must flow around entire inside diameter of hose to avoid causing hot spots which could eventually result in burned-through exhaust hoses. Exhaust hoses and/or tubes must be correctly connected to exhaust elbows so that they do not restrict the flow of discharge water from exhaust elbow.

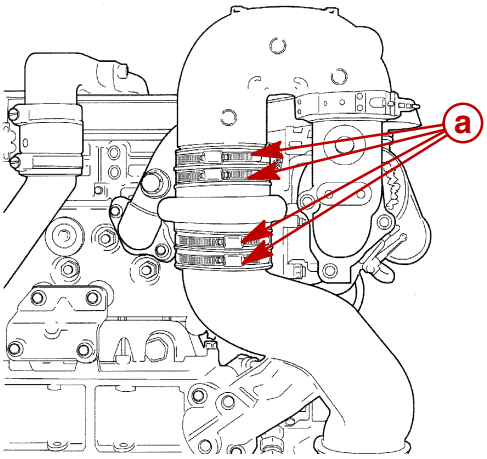

77346

a - Exhaust Hose Clamps

Electrical Connections

CONTINUITY CIRCUIT

1. Connect continuity circuit wire from engine to transom assembly. Tighten inner transom plate screw securely.

IMPORTANT: Do not attach any accessory ground (-) wires to transom plate ground point.

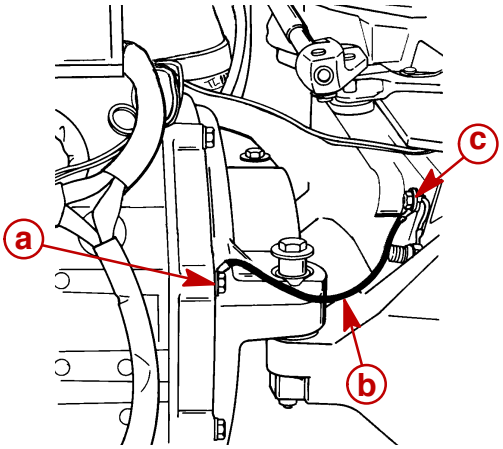

73567

a - Flywheel Housing Screw
b - Continuity Circuit Wire
c - Inner Transom Plate Grounding Screw

INSTRUMENT AND EXTENSION HARNESS

NOTE: *If using other than Quicksilver instrumentation and harnesses, refer to manufacturers' instructions.*

1. Connect extension harness to engine harness end. Connector collars must be fully engaged and secure. Tighten threaded connector collar of extension harness onto engine connector.

2. Ensure harness and connector are suitably fastened to transom.

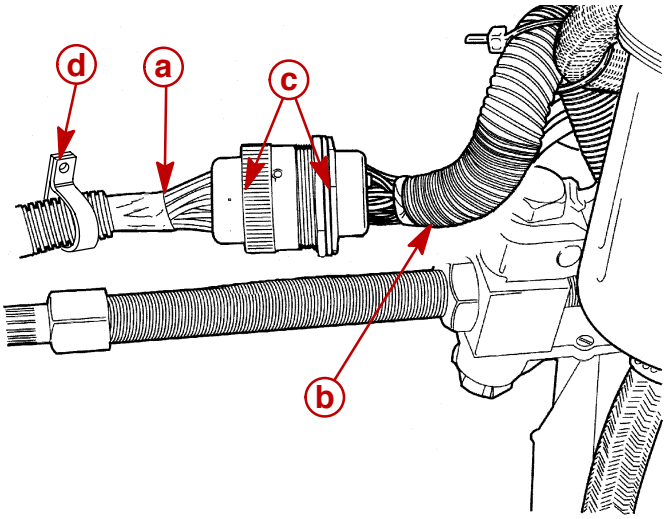

77340

21-Pin Deutsch™ Connection

a - Instrument Extension Harness
b - Engine Harness
c - Connector Collar
d - Example Of Harness Fastener

TRIM POSITION SENDER CONNECTION

Connect trim position sender leads from gimbal housing to leads from engine harness.

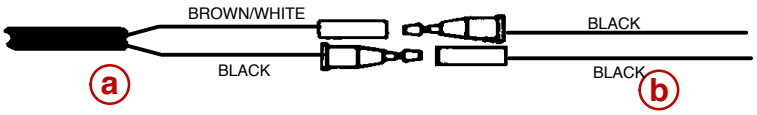

24841

a - From Engine Harness
b - From Gimbal Housing

NEUTRAL START SAFETY SWITCH

NOTE: *When using other than a Quicksilver Instrumentation, Basic Panel or Optional Panel instrumentation harness refer to manufacturer's instructions.*

1. Ensure Remote Control Neutral Start Safety Circuit connections are made before use. Refer to Wiring Diagrams and the following.

IMPORTANT: The two bullet connectors on primary station harness YELLOW/RED wire, as shipped from factory, have to be disconnected and reconnected to Neutral Start Safety Circuit switch wires from remote control.

2. When using a Quicksilver Instrumentation, Basic Panel or Optional Panel instrumentation harness:
   a. Disconnect the two YEL/RED bullet connectors.
   b. Connect the YEL/RED wires from the Remote Control Neutral Start Safety Circuit switch to the YEL/RED wires disconnected in Step 1.

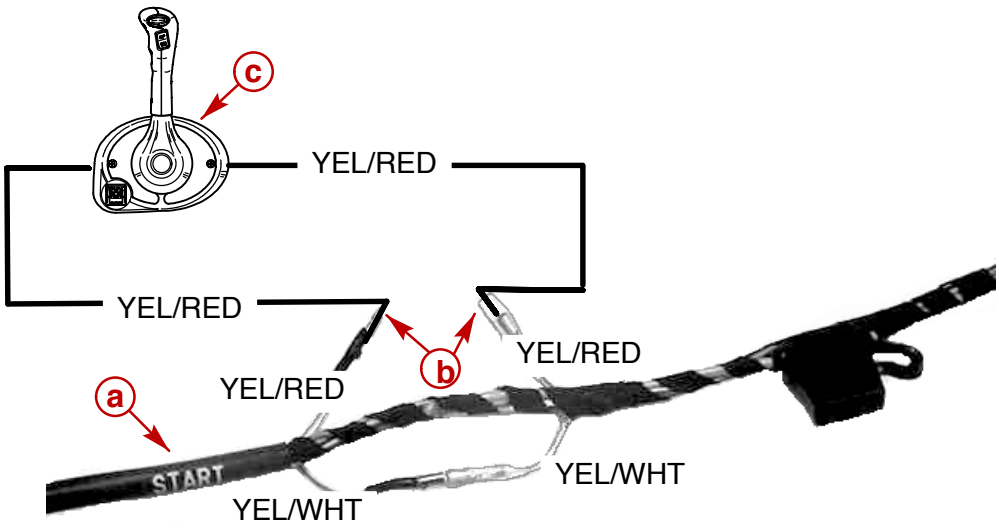

77413

Typical

a - START Wires Of Instrument Harness
b - YEL/RED Wires
c - Remote Control Neutral Start Safety Circuit

MERCATHODE CONTROLLER (IF EQUIPPED)

1. Connect electrical leads to controller assembly.

IMPORTANT: Ensure that opposite end of RED/PURPLE wire is connected to the positive (+) battery terminal.

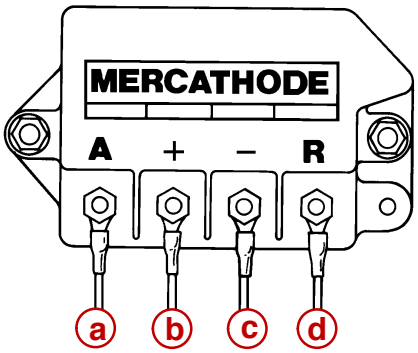

22232

a - ORANGE Wire - From Electrode On Transom Assembly
b - RED/PURPLE Wire - Connect (Other End) To Positive (+) Battery Terminal
c - BLACK Wire - To Engine Ground (-)
d - BROWN Wire - From Electrode On Transom Assembly

2. Apply a thin coat of Liquid Neoprene to ALL electrical connections.
3. After all wires are connected be sure to secure them with clamps or tie straps.

Power Steering Connections

1. Connect power steering hoses to control valve. Torque fittings.

IMPORTANT: Make hydraulic connections as quickly as possible to prevent oil leaks.

IMPORTANT: Be careful not to cross-thread or overtighten hose fittings.

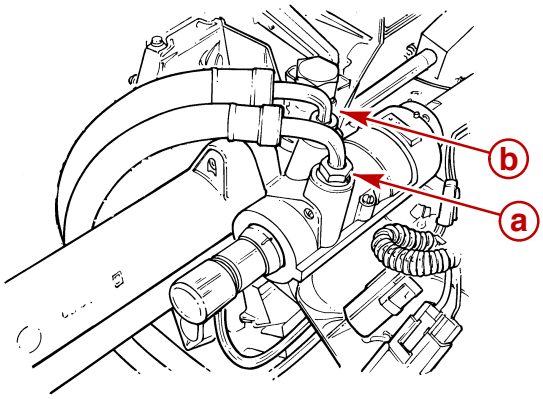

77759

a - Fluid Return Hose
b - High Pressure Hose

Description	Nm	lb-in.	lb-ft
Hydraulic Hose Fittings	31		23

Remote Control Shift Cable Adjustment (Sterndrive Unit Installed)

IMPORTANT: Shift cable adjustment for a right hand (RH) rotation sterndrive unit is different than the procedure for adjusting a left hand (LH) rotation sterndrive unit. Be sure to refer to the appropriate procedure when performing the following steps.

IMPORTANT: Sterndrive unit must be installed.

IMPORTANT: DO NOT operate engine.

1. Remove remote control shift cable and shift assist assembly (if installed).

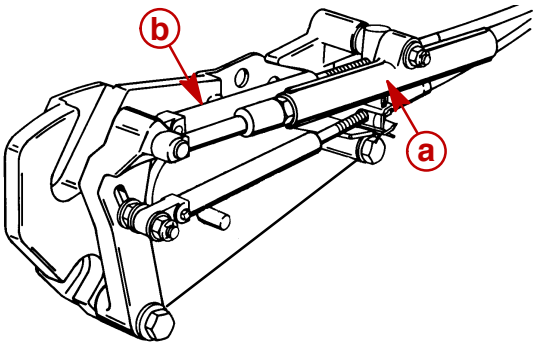

75414

With Shift Assist Assembly

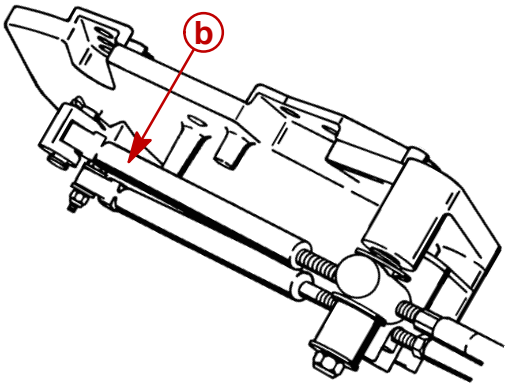

50310

Without Shift Assist Assembly

a - Shift Assist Assembly
b - Remote Control Shift Cable

2. Ensure shift lever adjustable stud is at bottom of slot.

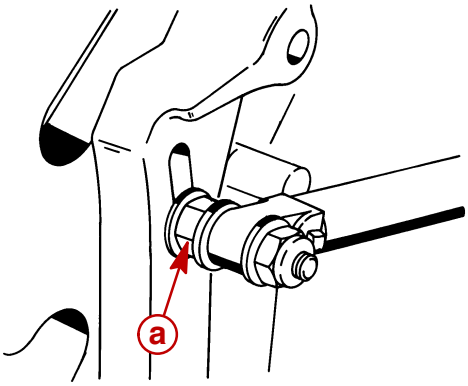

50309

a - Adjustable Stud

3. Shift remote control as follows:
   a. **Right Hand (RH) Rotation Sterndrive Unit -** FORWARD gear, past detent, into WOT position.
   b. **Left Hand (LH) Rotation Sterndrive Unit -** REVERSE gear, past detent, into WOT position.

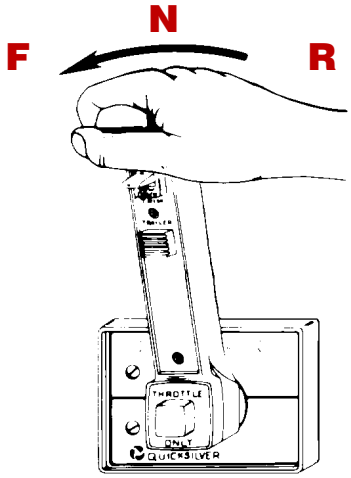

RH

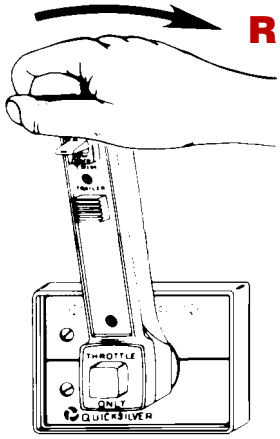

LH

4. Place sterndrive unit into gear by pushing in on sterndrive unit shift cable while simultaneously rotating propeller shaft COUNTERCLOCKWISE until shaft stops. This will ensure full clutch engagement. Maintain a light pressure on the sterndrive unit shift cable to hold it at the end of its travel (this removes all slack from the cable).

IMPORTANT: Do not use excessive force when holding pressure on the sterndrive unit shift cable.

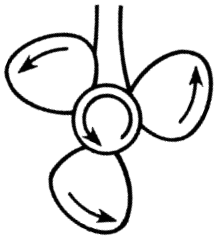

22266

Counterclockwise Propeller Shaft Rotation

5. Lightly pull on remote control shift cable end guide (to remove slack from remote control and cable) and adjust brass barrel as necessary to align attaching points with shift lever clevis pin hole and stud. Be sure to maintain light pressure on sterndrive unit shift cable.

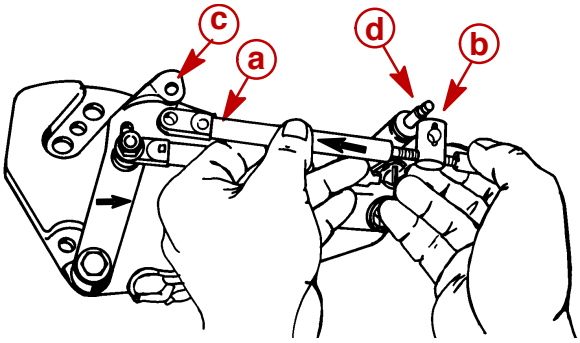

50309

a - End Guide
b - Brass Barrel
c - Shift Lever Clevis Pin Hole
d - Stud

6. Temporarily install remote control shift cable on stud and install clevis pin.

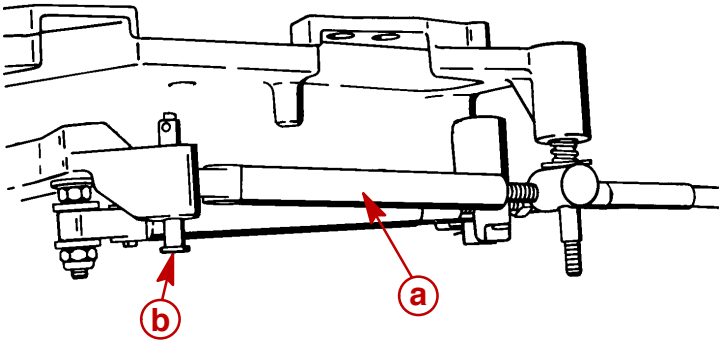

50308

a - Remote Control Shift Cable
b - Clevis Pin

7. Shift remote control as stated in a. or b. following:
   a. **Right Hand (RH) Rotation Sterndrive Unit -** reverse gear, past detent, into WOT position.
   b. **Left Hand (LH) Rotation Sterndrive Unit -** forward gear, past detent, into WOT position.

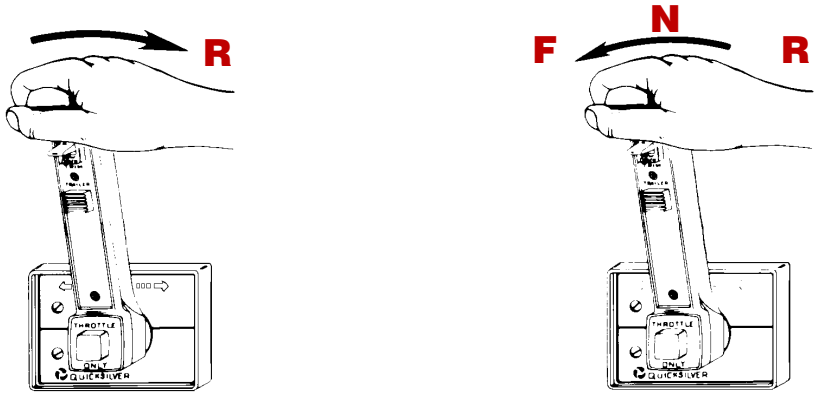

RH **LH**

8. To ensure full clutch engagement, simultaneously rotate propeller shaft CLOCKWISE until shaft stops.

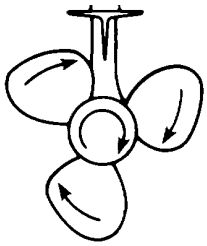

22267

Clockwise Propeller Shaft Rotation

NOTE: *If shift cable was damaged during installation, install new shift cable assembly. Refer to appropriate Mercury MerCruiser Sterndrive Service Manual, then repeat shift cable adjustment procedure.*

9. After remote control shift cable has been properly adjusted, reinstall cable and shift assist assembly (if applicable) and secure with hardware as shown. If shift assist assembly attaching points will not align, push in or pull out on end of shift assist assembly to install. Do not attempt to readjust shift cable.

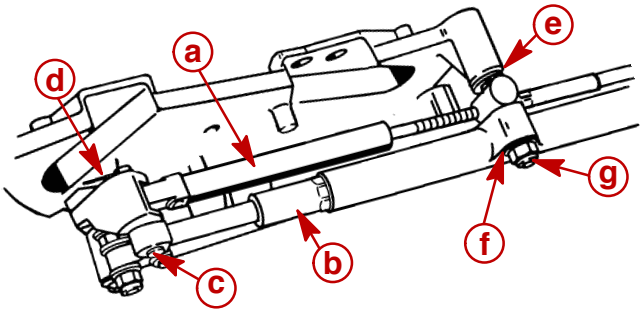

50308

With Shift Assist Assembly

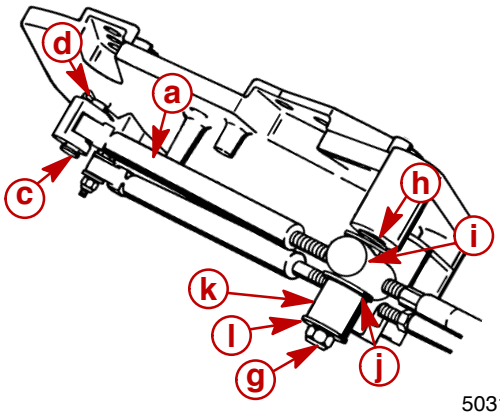

50310

Without Shift Assist Assembly

a - Remote Control Shift Cable
b - Shift Assist Assembly
c - Clevis Pin
d - Cotter Pin (Spread Both Prongs)
e - Large I.D. Washer
f - Small I.D. Washer
g - Locknut (Tighten Until Contacts, Then Loosen 1/2 Turn)
h - Spring (Existing)
i - Washer (Existing)
j - Washer
k - Spacer
l - Washer (Existing)

IMPORTANT: An additional adjustment may be needed because of:

- **An extra long remote control shift cable is used.**
- **Remote control has inadequate output travel.**
- **A large number of bends in remote control shift cable.**

Refer to Step 10. or 11. to make additional adjustments, as applicable.

10. **Remote Control with Single Lever Shift/Throttle Control:**
    a. **RIGHT HAND (RH) propeller rotation sterndrive unit -** Shift remote control into REVERSE gear, WOT position while simultaneously rotating propeller shaft CLOCKWISE. Clutch should engage and cause propeller shaft to lock. If clutch does not engage, loosen adjustable stud on shift lever and move it up in slot until clutch engages with reverse gear. Retighten stud.
    b. **LEFT HAND (LH) propeller rotation sterndrive unit -** Shift remote control into FORWARD gear, WOT position while simultaneously rotating propeller shaft CLOCKWISE. Clutch should engage and cause propeller shaft to lock. If clutch does not engage, loosen adjustable stud on shift lever and move it up in slot until clutch engages with forward gear. Retighten stud.
11. **Two Lever Remote Control with Separate Shift and Throttle Levers:**
    a. **RIGHT HAND (RH) propeller rotation sterndrive unit -** While turning propeller shaft CLOCKWISE, move remote control shift handle into full REVERSE position. Clutch should engage before shift lever comes to a stop. If clutch does not engage, loosen adjustable stud on shift lever and move it up in slot until clutch engages with reverse gear. Retighten stud.
    b. **LEFT HAND (LH) propeller rotation sterndrive unit -** While turning propeller shaft CLOCKWISE, move remote control shift handle into full FORWARD position. Clutch should engage before shift lever comes to a stop. If clutch does not engage, loosen adjustable stud on shift lever and move it up in slot until clutch engages with forward gear. Retighten stud.

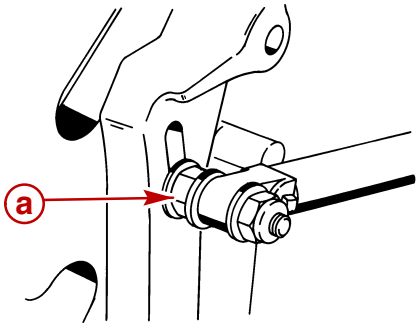

50309

Additional Adjustment

a - Adjustable Stud

Throttle Cable Installation and Adjustment

IMPORTANT: When installing throttle cables, ensure that cables are routed to avoid sharp bends and/or avoid contact with moving parts. DO NOT fasten any items to throttle cables.

1. Place remote control levers in NEUTRAL / IDLE position.
2. Lightly push on throttle cable end guide and turn barrel to align anchor points with studs. (This will place a slight preload on cable to avoid slack in cable when moving remote control lever).
3. Install cable and secure with hardware.
4. Tighten locknuts until they contact and loosen 1/2 turn.

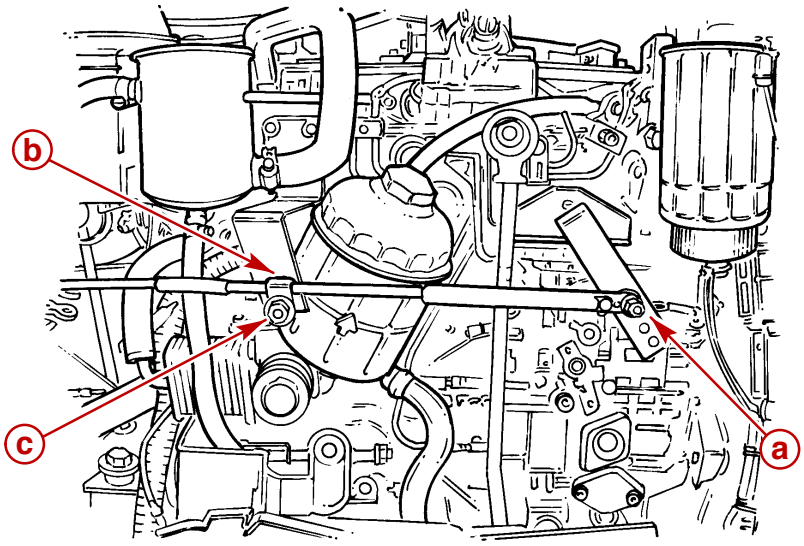

77312

a - Throttle Cable End Guide
b - Cable Barrel
c - Washers And Locknuts

5. Place remote control lever in full forward WOT position.

⚠ CAUTION

The injector pump lever WOT stop screw adjusts the engine speed governor and is factory set and sealed. DO NOT readjust this setting. Readjusting the governed speed and operating above the specified rpm will cause extensive engine damage and/or failure. Removal of the seal and/or readjustment of the WOT stop screw is considered misuse of engine and resulting damages will not be covered by the limited warranty.

6. Ensure injection pump lever is contacting WOT stop screw, DO NOT attempt to adjust screw (screw is sealed).
7. Ensure that remote control and cable are providing proper output.

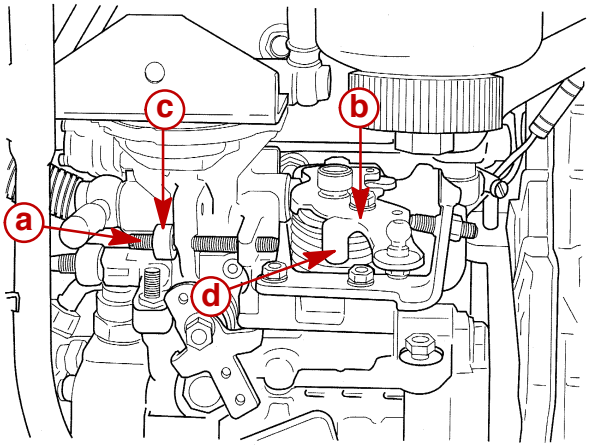

77344

a - WOT Stop Screw (Non Adjustable)
b - Injection Pump Lever
c - Seal
d - Contact Point - Lever / WOT Stop Screw

8. Place remote control lever in NEUTRAL / IDLE position. Ensure that injection pump lever contacts idle screw. Readjust throttle cable barrel if necessary.

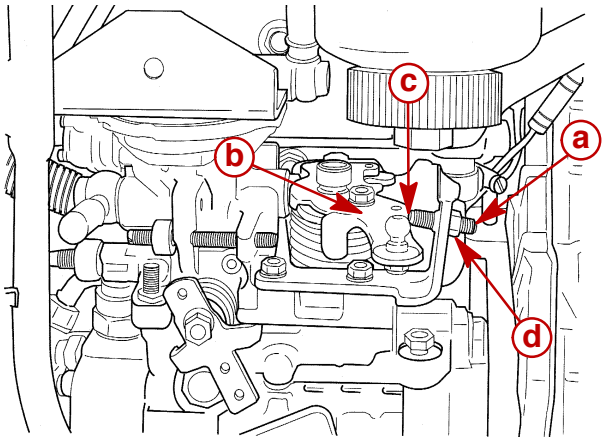

77344

a - Idle Screw
b - Injection Pump Lever
c - Stop
d - Jam Nut

9. Recheck that injection pump lever contacts WOT stop screw in full throttle position and idle screw in idle positions.

Battery Cables

1. Connect battery cables to engine:
   a. Make sure that grounding stud and starter solenoid terminal are free of paint and any other material that could cause a poor electrical connection.
   b. After battery cables are connected, apply a thin coat of Liquid Neoprene to the terminals.
   c. Be sure to slide rubber boot over the positive (+) terminal after Liquid Neoprene dries.
2. Connect battery cables to battery by FIRST connecting positive (+) battery cable (usually red) to positive (+) battery terminal. Tighten clamp securely.
3. Connect negative (-) battery cable (usually black) to negative (-) battery terminal. Tighten clamp securely.

NOTE: *Spray terminals with a battery connection sealant to help retard corrosion.*

Power Trim Pump

IMPORTANT: Check oil level with sterndrive in the full down position.

IMPORTANT: Use Quicksilver Power Trim and Steering Fluid, SAE 10W-30 or 10W-40 engine oil in trim system.

1. Unscrew fill cap and **remove** cap plug from fill neck and **discard**. Replace fill cap.

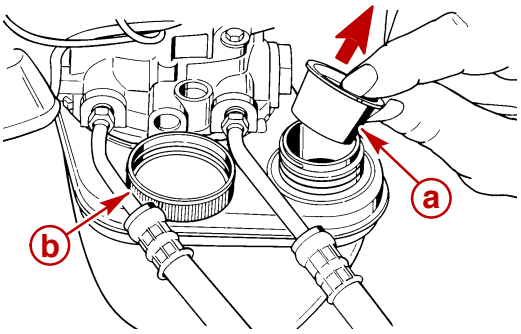

50630

a - Cap Plug
b - Fill Cap

2. Raise and lower sterndrive (to the FULL UP position) 6 to 10 times to purge air from system. Check oil level visually, (with sterndrive in the FULL DOWN position). Oil level should be maintained at bottom lip of fill neck.

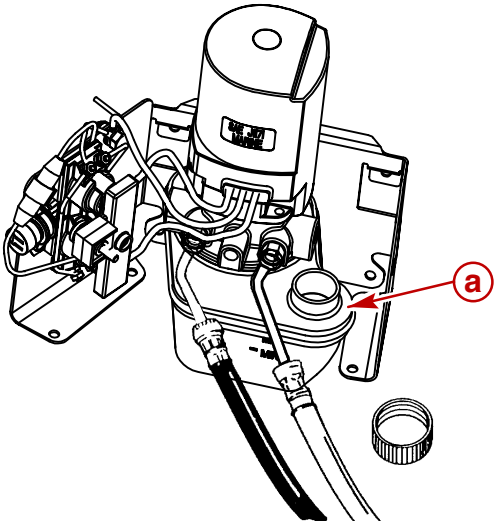

77348

a - Fill Neck

3. Check all trim line connection points for leaks. If fluid is visible at fittings, ensure fittings are properly torqued.

Description	Nm	lb-in.	lb-ft
Power Trim Line Connections	14	125	

Drive Lube Monitor

IMPORTANT: Oil level in monitor will rise and fall during sterndrive operation; always check oil level when sterndrive is cool and engine is shut down.

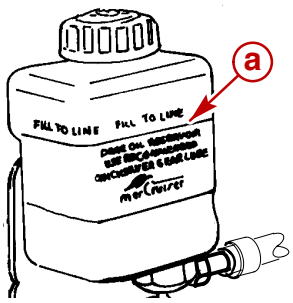

74235

Gear Lube Monitor

a - Fill Line

1. With sterndrive in full down position, remove oil vent screw.

⚠ CAUTION
Failure to fill sterndrive to level of vent hole will result in a low sterndrive oil level. Gear lube monitor only MAINTAINS sterndrive oil level and will not correct an improperly filled sterndrive.

2. Fill gear lube monitor with Gear Lube. When oil starts to run out the oil vent hole, reinsert oil vent screw, and sealing washer, and tighten securely.

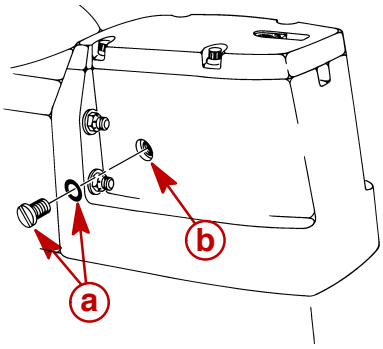

70021

a - Oil Vent Screw And Sealing Washer
b - Oil Vent Hole

Description	Where Used	Method of Use	Part Number
High Performance Gear Lube	Sterndrive system	Fill system	92-802854A1

3. Fill monitor to “FULL” mark. Ensure that rubber gasket is inside monitor cap. Install cap. DO NOT overtighten cap.
4. Recheck oil level after first use.

Propeller Installation

⚠ WARNING

Be sure that remote control is in neutral position and ignition key is removed from switch prior to installing propeller.

⚠ WARNING

Place a block of wood between the anti-ventilation plate and propeller to protect hands from propeller blades and to prevent propeller from turning when tightening propeller nut.

1. To aid in future removal of the propeller, liberally coat propeller shaft splines with one of the following lubricants:

- Special Lubricant 101
- 2-4-C Marine Lubricant with Teflon

IMPORTANT: Installation is correct when at least 2 threads of propeller shaft are exposed through propeller nut after torquing it.

2. Install propeller with attaching hardware as shown. Tighten nut to minimum specified torque is attained, then continue to tighten until 3 tabs on the tab washer align with grooves on spline washer. Bend the 3 tabs down into grooves.

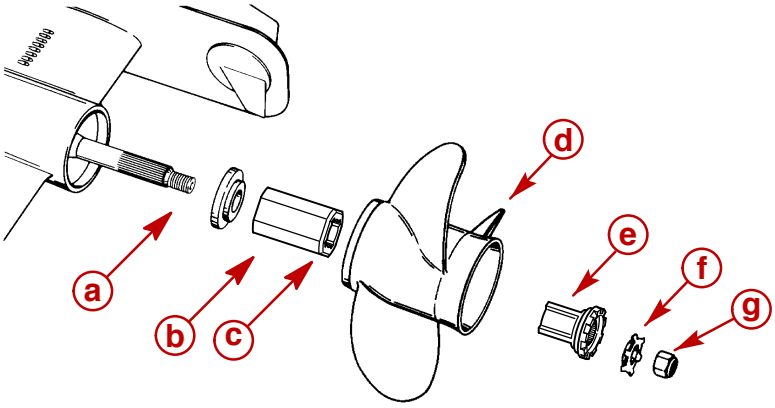

76910

a - Propeller Shaft Splines
b - Forward Thrust Hub
c - Flo-Torque II sterndrive Hub
d - Propeller
e - Sterndrive Sleeve Adapter
f - Locking Tab Washer
g - Propeller Nut

Description	Nm	lb-in.	lb-ft
Alpha Propeller Nut (Minimum)	75		55

Test Running Engine

⚠ WARNING

Electrical system components on this engine are not external ignition protected. DO NOT STORE OR UTILIZE GASOLINE ON BOATS EQUIPPED WITH THESE ENGINES, UNLESS PROVISIONS HAVE BEEN MADE TO EXCLUDE GASOLINE VAPORS FROM ENGINE COMPARTMENT (REF: 33 CFR). Failure to comply could result in fire, explosion and/or severe personal injury.

⚠ WARNING

If engine is to be tested with boat out of water, the propeller must be removed to avoid injury.

1. Supply cooling water to water intake holes on sterndrive unit.

IMPORTANT: <u>If using a test tank,</u> ensure water level is above water intake holes.

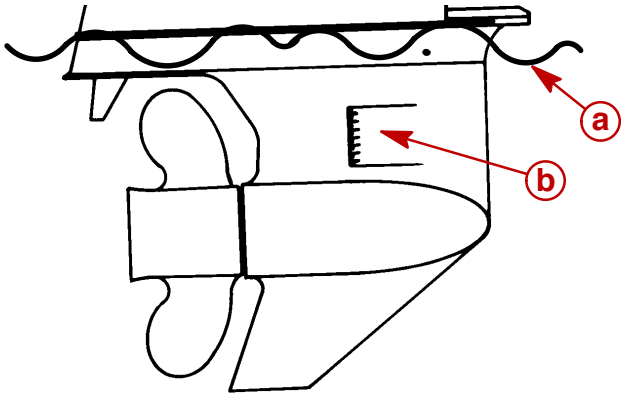

70082

a - Minimum Water Level
b - Water Intake Holes

IMPORTANT: <u>If using flush test device,</u> install over water intake holes and connect a water hose as shown. Do not use full water tap pressure. Also, do not run engine above 1500 rpm, as suction created could cause water hose to collapse causing water supply to be cut off.

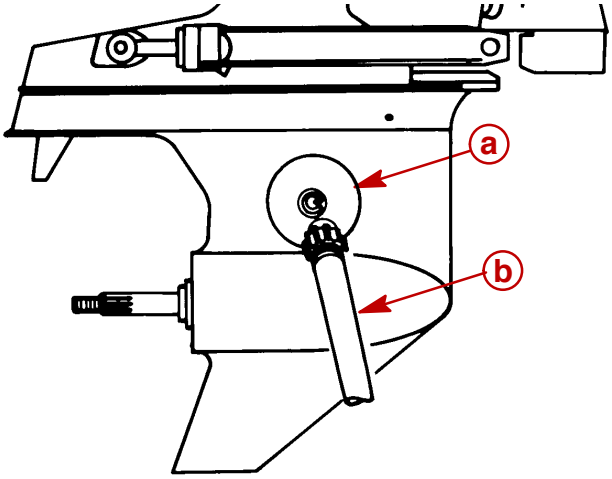

70132

a - Flush Test Device
b - Water Hose

⚠ WARNING

Do not leave helm unattended when making test with boat in the water.

1. Ensure that cooling system drain plugs and hoses are installed and tight.

NOTE: *Refer to appropriate Mercury MerCruiser Operation, Maintenance and Warranty Manual" for operating specifications and fluid capacities.*

2. Check closed cooling system fluid level.
3. Check crankcase oil level.

⚠ CAUTION

Avoid possible injury or damage to oil dipstick and internal engine components. Do not remove crankcase oil dipstick when engine is running. Stop the engine completely before removing or inserting dipstick.

4. Check sterndrive oil level.
5. Check tension of drive belts.
6. Test audio warning system.

IMPORTANT: Avoid overheating the starter in the following step. Do NOT engage starter for more than 15 seconds; allow at least one minute cool down time before re-engaging starter for another 15 seconds.

7. Pre-lubricate turbocharger and engine. To do this, hold the STOP switch engaged while you simultaneously turn the key switch to the START position for 15 seconds. Doing this *together* turns the engine without starting it. Repeat the process as needed. Pre-lubrication is complete when oil pressure is shown by instruments.
8. Refer to appropriate Mercury MerCruiser Operation, Maintenance and Warranty Manual and start engine. Run at IDLE rpm until water temperature is normal.
9. Watch all gauges for normal readings.
10. Turn steering wheel starboard, then port, and ensure sterndrive turns the correct way.
11. Inspect engine compartment for water, oil, fuel and exhaust leaks.

12. Check for lugging condition.
    a. Turn steering wheel **LEFT** until it stops, and continue to apply pressure. If pump lugs (engine rpm drops and/or power steering pump tone changes), check the following:
        (1.) Check for an obstruction between gimbal ring and gimbal housing and all moving steering components.
        (2.) Check that steering lever is not contacting cutout in transom. If contact is being made, modify cutout.
    b. Turn steering wheel **RIGHT** until it stops, and continue to apply pressure. If pump lugs (engine rpm drops and/or power steering pump tone changes), check the following:
        (1.) Check for an obstruction between gimbal ring and gimbal housing and all moving steering components.
        (2.) Ensure that steering lever is not contacting cutout in transom. If contact is being made, modify cutout.
        (3.) Check steering cable end dimension with cable FULLY EXTENDED. (Refer to appropriate Mercury MerCruiser Product Application or Installation Manual for proper steering cable dimensions.)
13. Stop the engine and turn the key switch to the OFF position.

IMPORTANT: Make sure the cable end that enters clevis is heavily lubricated with Special Lubricant 101.

14. Lubricate steering cable and clevis with Special Lubricant 101.

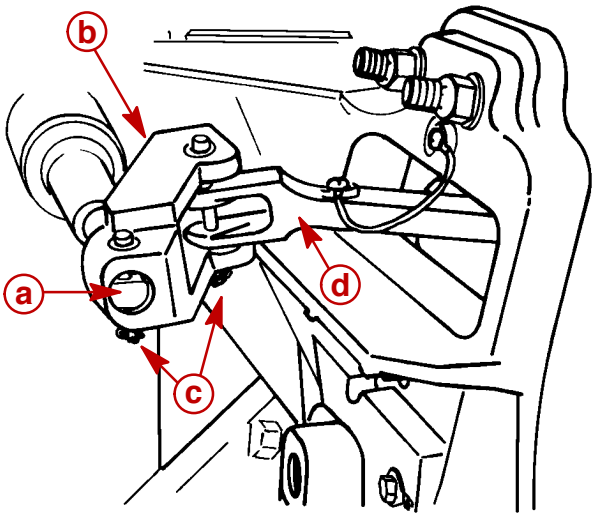

71904

a - Steering Cable End
b - Clevis
c - Clevis Pins And Cotter Pins
d - Steering Lever

Checking Shift Operation

With sterndrive installed and engine running, ensure that sterndrive shifts properly, as follows:

1. Shift into FORWARD and REVERSE gears, making sure that clutch engages before engine begins to accelerate.
2. Accelerate engine while in FORWARD and REVERSE gears to ensure that engine does not stop.
3. If the proper results are not achieved in the previous steps, shift cables must be readjusted.
4. Shifting from FORWARD and REVERSE to NEUTRAL: ensure that sterndrive is in NEUTRAL before remote control shift lever enters the NEUTRAL detent position. Perform this check using various shifting rates to ensure that the sterndrive shifts the same whether shifting fast or slow.

Boat-In-The-Water Tests

IMPORTANT: DO NOT perform the following with boat in a test tank or tied to dock.

ENGINE INITIAL BREAK-IN PROCEDURE

It is especially important that the following procedure be used on new diesel engines. This break-in procedure allows the proper seating of the pistons and rings, which greatly reduces the likelihood of low hour problems.

IMPORTANT: Avoid overheating the starter in the following step. Do NOT engage starter for more than 15 seconds; allow at least one minute cool down time before re-engaging starter for another 15 seconds.

1. Pre-lubricate turbocharger and engine. To do this, hold the STOP switch engaged while you simultaneously turn the key switch to the START position for 15 seconds. Doing this *together* turns the engine without starting it. Repeat the process as needed. Pre-lubrication is complete when oil pressure is shown by instruments.

IMPORTANT: It is recommended that the boat <u>not</u> be accelerated hard until this procedure has been completed.

2. Start engine and run at idle until coolant has reached minimum operating temperature 65° C (150° F).
3. Run engine in gear for 3 minutes at each of the following rpms: 1400 rpm, 2800 rpm and 3500 rpm.
4. Run engine in gear for 3 minutes at each of the following rpms: 1700 rpm, 3200 rpm and 4000 rpm.
5. Run engine in gear for 3 minutes at each of the following rpms: 2100 rpm, 3500 rpm and Specified Wide Open Throttle rpm.

ENGINE IDLE SPEED ADJUSTMENT

⚠ WARNING

DO NOT leave helm unattended while performing idle speed check. Boat MUST BE moving forward (not tied to the dock) when checking idle speed.

⚠ CAUTION

The injector pump lever Wide-Open-Throttle stop screw adjusts the engine speed governor, and is factory set and sealed. DO NOT readjust this setting. Readjusting the governed rpm will cause extensive engine damage, and/or failure. Removal of the seal, and/or readjustment of the WOT stop screw is considered misuse of engine and resulting damages will not be covered by the limited warranty.

Idle speed **must be 725 - 750 rpm, in neutral at normal operating temperature.** If necessary, proceed with the following readjustment.

1. Adjusting screw "**a**" is on the frontside of the fuel injector pump, and is secured by a jam-nut. Using a 10 mm wrench, loosen jam-nut "**d**," while holding adjusting screw from turning.
2. Using an accurate tachometer, adjust idle speed, as follows:
   a. TO LOWER IDLE SPEED - turn adjusting screw "**a**" COUNTERCLOCKWISE until idle rpm is reached. Ensure that adjusting screw "**a**" is touching injection pump lever stop "**c**."
   b. TO INCREASE IDLE SPEED - turn adjusting screw "**a**" CLOCKWISE until idle rpm is reached. Ensure that adjusting screw "**a**" is touching injection pump lever stop "**c**."
   c. Tighten jam nut while preventing screw "**a**" from turning.

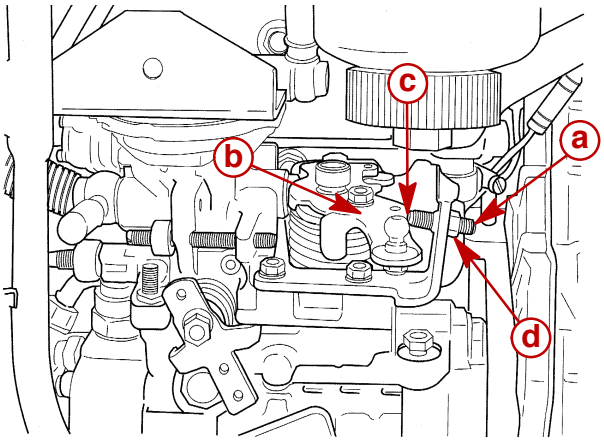

77344

a - Idle Screw
b - Injection Pump Lever
c - Stop
d - Jam Nut

MAXIMUM RPM TEST

Power package should be equipped with a propeller that will allow engine to operate at its specified maximum wide open throttle revolutions per minute (rpm), with an average load aboard the boat. Best all around performance is obtained with the engine propped at or near the upper limit of the specified Engine Specified Operating RPM Range.

IMPORTANT: The engine covered in this manual is equipped with a governor that limits engine rpm. Be sure that propeller being used does not allow engine to run against the governor as a significant loss in performance will result.

Engine RPM Limits		
MCM Model	**Engine Specified Operating RPM Range**	**Governor RPM Setting (Begins At:)**
D1.7L DTI	4000 - 4400	4400

To check that the correct propeller has been installed, operate the boat with a normal load at wide open throttle and optimal trim. (Optimal trim is the point where boat speed no longer increases when trimming-out. High rpm caused by excessive trimming should not be used when checking for correct propeller.) The rpm should be near the top of specified range so that under a heavy load, engine speed will not fall below specifications. If engine speed is too high, replace propeller with one that has a higher pitch. If engine speed is too low, replace with a lower pitch propeller.

If a propeller cannot be obtained that will place the engine in the proper rpm range, it may be necessary to have the propeller reworked at a propeller repair station.

IMPORTANT: To run engine at maximum rpm before the Engine 20-Hour Break-In Period is complete, follow this procedure only after the Engine Initial Break-in Procedure has been completed:

1. Complete Engine Initial Break-In Procedures if not already accomplished.
2. Start engine and run at idle rpm until normal operating temperature is reached.
3. Run boat up on plane.
4. Advance engine rpm (in 200 rpm increments) until engine reaches its maximum rated rpm. If maximum rated rpm is not possible or engine runs against governor refer to preceding information for correct propeller selection.

IMPORTANT: Do not run at maximum rpm for more than 2 minutes.

After Running Engine

⚠ CAUTION

If Power Package will not be used for an extended period of time, or will be exposed to freezing temperatures, drain water from seawater cooling system, as explained in the owner's appropriate Mercury MerCruiser Operation, Maintenance and Warranty Manual. Water MUST BE drained to prevent corrosion and freeze damage to engine.

1. If Power Package will not be used for an extended period of time, or will be exposed to freezing temperatures, drain water from seawater cooling system.

⚠ CAUTION

Sterndrive should be stored in full DOWN position. Universal Joint bellows may develop a set if unit is stored in raised position and may fail when unit is returned to service.

2. If power package is to be stored, position sterndrive full DOWN/IN.

THIS PAGE IS INTENTIONALLY BLANK

ENGINE

Section 3A-D1.7L DTI Engine Mechanical

Table of Contents

3
A

Table of Contents (Continued)

Identification

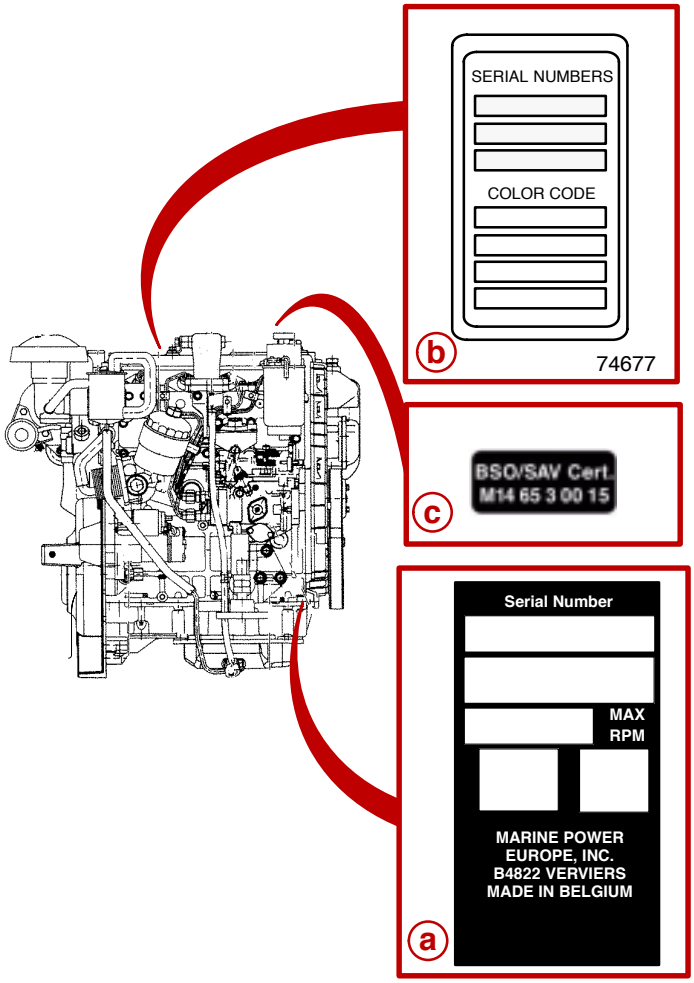

77300

Sterndrive (MCM)

- **a** - Serial Number Plate
- **b** - Serialized Decal
- **c** - Emission Certificate Decal

Engine Specifications

NOTICE
Unit Of Measurement: mm (in.)

Piston Rings

Groove Width	1st Compression	2.080 - 2.100 (.0819 - .0827)
	2nd Compression	1.560 - 1.580 (.0614 - .0622)
	Oil Control	3.015 - 3.035 (.1187 - .1195)
Ring Thickness	1st Compression	1.978 - 1.990 (.0779 - .0783)
	2nd Compression	1.470 - 1.490 (.0579 - .0587)
	Oil Control	2.970 - 2.990 (.1169 - .1177)
End Gap	1st Compression	0.250 - 0.350 (.0098 - .0138)
	2nd Compression	0.200 - 0.300 (.0079 - .0118)
	Oil Control	0.200 - 0.400 (.0079 - .0157)
Ring to Groove Clearance	1st Compression	0.090 - 0.122 (.0035 - .0048)
	2nd Compression	0.070 - 0.110 (.0028 - .0043)
	Oil Control	0.025 - 0.065 (.0010 - .0026)
	Limit–All Rings	0.15 (0.006)

Piston

Piston Outside Diameter	Grade A	78.930 - 78.939 (3.1075 - 3.1078)
	Grade B	78.940 - 78.949 (3.1079 - 3.1082)
	Grade C	78.950 - 78.959 (3.1083 - 3.1086)
Piston To Cylinder Wall Clearance		0.061 - 0.079 (.0024 - .0031)
Pin Hole Inner Diameter	Production	27.004 - 27.009 (1.0631 - 1.0633)
Maximum Weight Difference Between Pistons in One Engine		22 gr. (.77 oz.)

Piston Pin

Piston Pin Outer Diameter	Production	26.995 - 27.000 (1.063)
	Limit	26.985 (1.0624)
Clearance	Production	.004 - .014 (0.0001 - 0.0005)
	Limit	0.04 (0.0016)

Engine Specifications (continued)

NOTICE
Unit Of Measurement: mm (in.)

Oil Pump

Oil pump shaft clearance in cylinder block	Production	0.040 - 0.125 (.0015 - .0049)
	Limit	0.200 (.0078)
Rotor end float	Production	0.035 - 0.100 (.0014 - .0039)
	Limit	0.150 (.0059)
Clearance between outer rotor and cylinder block	Production	0.24 - 0.36 (.0094 - .0141)
	Limit	0.40 (.0015)
Clearance between inner and outer rotors (mesh)	Production	0.13 - 0.15 (.0051 - .0059)
	Limit	0.20 (.0078)

Cylinder Block

Upper Surface Warp	Production	0.05 (0.0019) or Less
	Limit	0.1 (0.0039)
Crankshaft Journal Hole Diameter		55.976 - 56.000 (2.204 - 2.205)
Cylinder Bore Diameters	Nominal	79.000 (3.1102)
	Grade - A	79.001 - 79.010 (3.1102 - 3.1106)
	Grade - B	79.011 - 79.020 (3.1106 - 3.1110)
	Grade - C	79.021 - 79.030 (3.1110 - 3.1114)
Cylinder Block Height	Production	272 (10.71)

Cylinder Head

Warp and Flatness	Overall	0.075 (.0030)
	Per 125 mm (5 in.)	0.025 (.0010)
Valve Guide Inside Diameter		6.000 - 6.015 (.2362 - .2368)

Engine Specifications (continued)

NOTICE
Unit Of Measurement: mm (in.)

Camshaft Carrier

Camshaft Carrier Lower Face Warp	Production	Less Than 0.05 (.002)
	Limit	0.05 (.0019)
Journal Hole Diameter		27.000 - 27.021 (1.063 - 1.064)
Clearance between journal and bracket bearing surface	Production	0.040 - 0.082 (.0015 - .0032)
	Limit	0.110 (.0043)
Camshaft Carrier Height	Production	29.62 (1.166)

Camshafts

Journal Diameter	Production	26.939 - 26.960 (1.0605 - 1.0614)
	Limit	–
Intake Lobe Lift (Camshaft Height)	Production	7.80 (.307)
	Limit	7.68 (.302)
Exhaust Lobe Lift (Camshaft Height)	Production	7.95 (.312)
	Limit	7.77 (.306)
Camshaft Runout	Production	0.03 (.0011)
	Limit	0.05 (.0019)

Engine Specifications (continued)

NOTICE
Unit Of Measurement: mm (in.)

Valve Adjustment

Valve Clearance	Intake	0.35 - 0.45 (.014 - .018)
	Exhaust	0.45 - 0.55 (.18 - .021)

Valve

Intake Valve Stem Diameter	Production	5.959 - 5.977 (.2346 - .2353)
	Limit	5.945 (.2341)
Exhaust Valve Stem Diameter	Production	5.954 - 5.972 (.2344 - .2351)
	Limit	5.940 (.2339)
Intake Valve Guide Inside Diameter	Standard	0.023 - 0.050 (.001 - .002)
	Limit	0.080 (.003)
Exhaust Valve Guide Inside Diameter	Standard	0.028 - 0.056 (.001 - .002)
	Limit	0.095 (.004)
Valve Stem Clearance	Intake	0.023 - 0.056 (.0009 - .0022)
	Exhaust	0.028 - 0.610 (.0011 - .0240)
Head Diameter	Intake	27.35 - 27.65 (1.077 - 1.088)
	Exhaust	26.35 - 26.65 (1.037 - 1.045)
Face Width	Intake	2.4 (.095)
	Exhaust	2.4 (.095)
Face Angle (New)	Intake	44° 40’
	Exhaust	44° 40’
Valve Margin (Production)	Intake	1.2 - 1.4 (0.047 - 0.055)
	Exhaust	
Margin (After Grinding)	Intake	1.0 (0.039)
	Exhaust	

Engine Specifications (continued)

NOTICE
Unit Of Measurement: mm (in.)

Valve Seat

Seat Angle	Intake	89° 30’
	Exhaust	89° 30’
Seat Width	Intake	1.7 (.067)
	Exhaust	1.5 (.059)
Seat Outer Diameter	Intake	28.6 (1.126)
	Exhaust	27.6 (1.086)
Seat Height	Intake	5 (.197)
	Exhaust	5 (.197)
Valve Recession (Max.)	Intake	1.05 (.041)
	Exhaust	0.6 (.024)

Valve Guide

Maximum Clearance	Intake	0.080 (.0031)
	Exhaust	0.095 (.0037)
Upper End Height	Intake	11.7 (.4606)
	Exhaust	

Valve Spring

Free Standing Height	Production	44.63 (1.76)
	Limit	44.13 (1.74)
Compressed Height at Pressure	Production	33.3 (1.31) at 160 N (36 lb)
	Limit	
Spring Inclination	Production	1.01 (0.040)
	Limit	
Valve Closed		33.3 (1.31)
Valve Open		25.3

Engine Specifications (continued)

NOTICE
Unit Of Measurement: mm (in.)

Crankshaft

Main Journal Outside Diameter-Grade 1, Size Mark:	Production	51.918 - 51.928 (2.0440 - 2.0444)
	Limit	51.912 (2.0438)
Main Journal Outside Diameter-Grade 2, Size Mark	Production	51.928 - 51.938 (2.0444 - 2.0448)
	Limit	51.922 (2.0442)
Connecting Rod Journal Outside Diameter	Production	45.930 - 45.945 (1.8083 - 1.8089)
Main Bearing Clearance	Production	0.030 - 0.058 (.0011 - .0023)
	Limit	0.080 (.003)
Connecting Rod Journal Outside Diameter		45.930 - 45.945 (1.808 - 1.811)
Connecting Rod Bearing Clearance		0.025 - 0.058 (.0010 - .0023)
Crankshaft and Connecting Rod Journal Wear or Taper	Standard	0.05 (.0019) or Less
	Limit	0.08 (.003)
Crankshaft End Play (Thrust Clearance)	Production	0.05 - 0.15 (.0019 - .0059)
	Limit	0.20 (.0078)
Crankshaft Runout	Production	0.05 (.0019) or Less
	Limit	0.06 (.002)

Connecting Rod Crank Pin Bore

Inner Diameter	I (Blue Mark)	48.94 - 49.00 (1.927 - 1.929)
	II (Black Mark)	48.88 - 48.94 (1.924 - 1.927)
	III (Brown Mark)	48.82 - 48.88 (1.922 - 1.924)
Allowable Wear or Taper	Standard	0.05 (.0019) or Less
	Limit	0.08 (.003)

Connecting Rod Bushing

Connecting Rod Bushing Inner Diameter		27.008 - 27.015 (1.063 - 1.064)
Bushing To Piston Pin Clearance	Standard	0.008 - 0.020 (.0003 - .0008)
	Limit	0.05 (.002)

Torque Specifications

IMPORTANT: Tighten all fasteners not listed according to torque values shown in the Standard Torque Values table.

Specified Torque Values

VALVE COVER, CAMSHAFT CARRIER AND CYLINDER HEAD

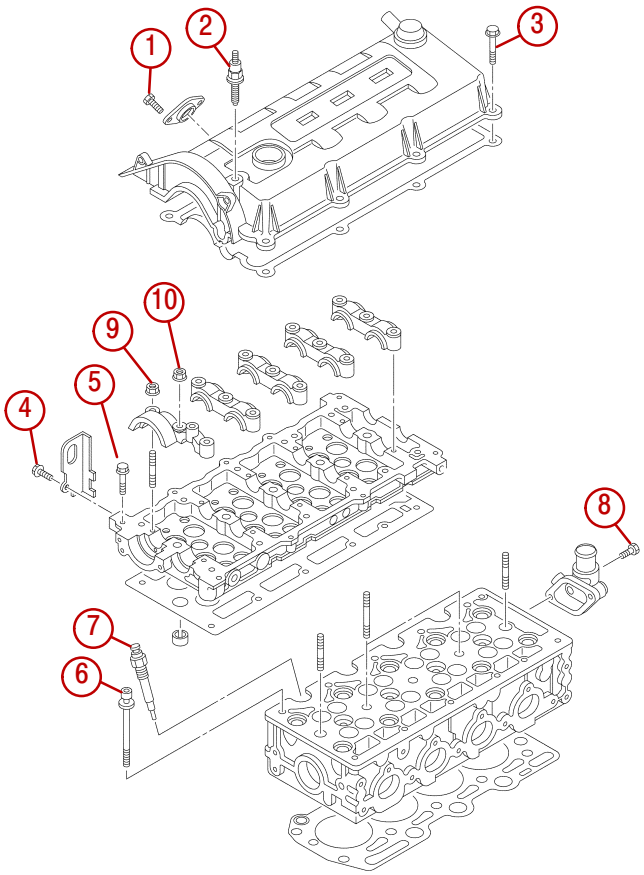

77081

Description			Nm	lb-in.	lb-ft
1	Bolt, Injector Cover	M6 x 1.0	9.8	86	
2	Bolt, Valve Cover	M6 x 1.0	9.8	86	
3	Bolt, Valve Cover	M6 x 1.0	9.8	86	
4	Bolt, Engine Lifting Eye	M8 x 1.25	25		18
5	Bolt, Carrier	M8 x 1.25	22		16
6	Bolt, Cylinder Head	M12 x 1.5			
		First Pass	39		29
		Second Pass	60°		
		Final Pass	60°		
7	Plug, Glow	M10 x 1.25	17.5	155	
8	Bolt, Water Outlet	M8 x 1.25	24		18
9	Nut, Camshaft Bracket	M8 x 1.25	22		16
10	Nut, Camshaft Bracket	M10 x 1.25	43		32

CYLINDER BLOCK AND WATER PUMP

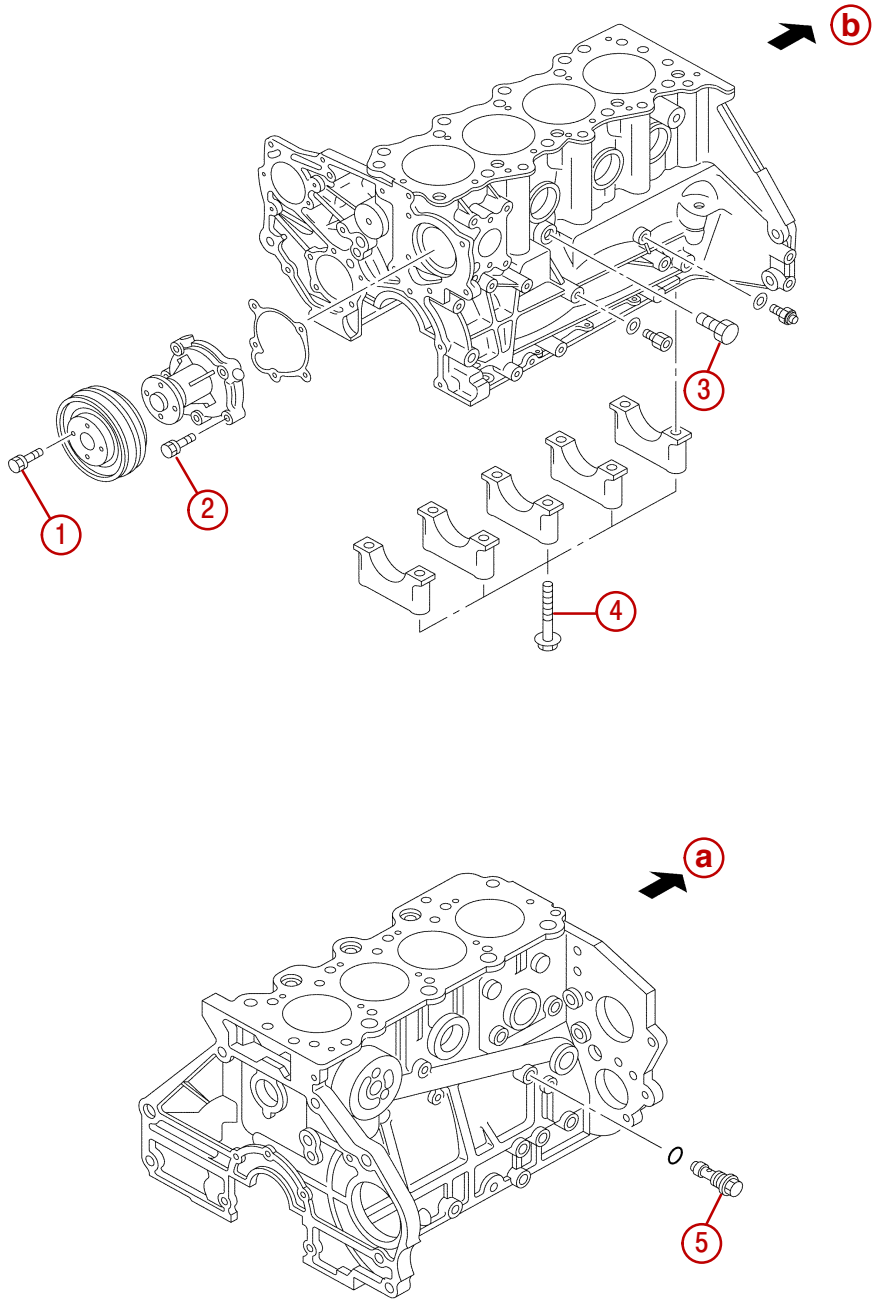

a - Front
b - Rear

	Description		Nm	lb-in.	lb-ft
1	Bolt, Water Pump/Power Steering Pulley	M6 x 1.0	9.8	37	
2	Bolt, Water Pump	M8 x 1.25	24		18
3	Fitting, Water Pipe	PT 1/4	19	168	
4	Bolt, Bearing Cap	M11 x 1.5	88		65
5	Valve, Check	M18 x 1.5	29		21

OIL PAN AND RELATED PARTS

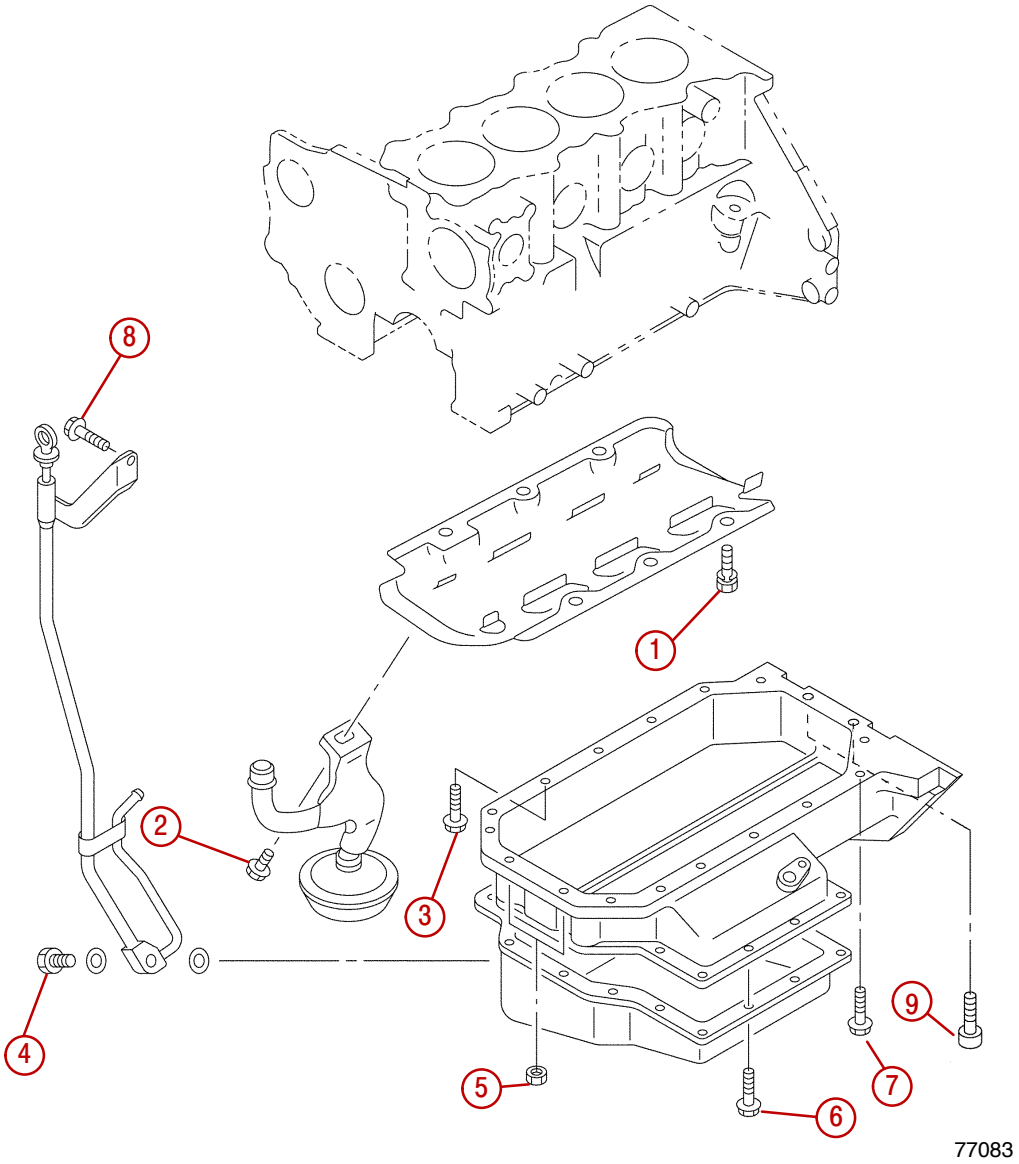

Description			Nm	lb-in.	lb-ft
1	Bolt, Baffle Plate	M8 x 1.25	19	168	
2	Bolt, Oil Pickup Assembly	M8 x 1.25	26		19
3	Bolt, Oil Pan Upper	M6 x 1.0	9.8	87	
4	Hollow Bolt, Oil Dipstick Assembly	M14 x 1.5	78		58
5	Nut, Oil Pan	M6 x 1.0	9.8	87	
6	Bolt, Oil Pan Lower	M6 x 1.0	9.8	87	
7	Bolt, Oil Pan Upper	M6 x 1.0	9.8	87	
8	Bolt, Guide Tube	M8 x 1.25	19	168	
9	Bolt, Oil Pan	M6 x 1.0	9.8	87	

TIMING PULLEYS AND RELATED PARTS

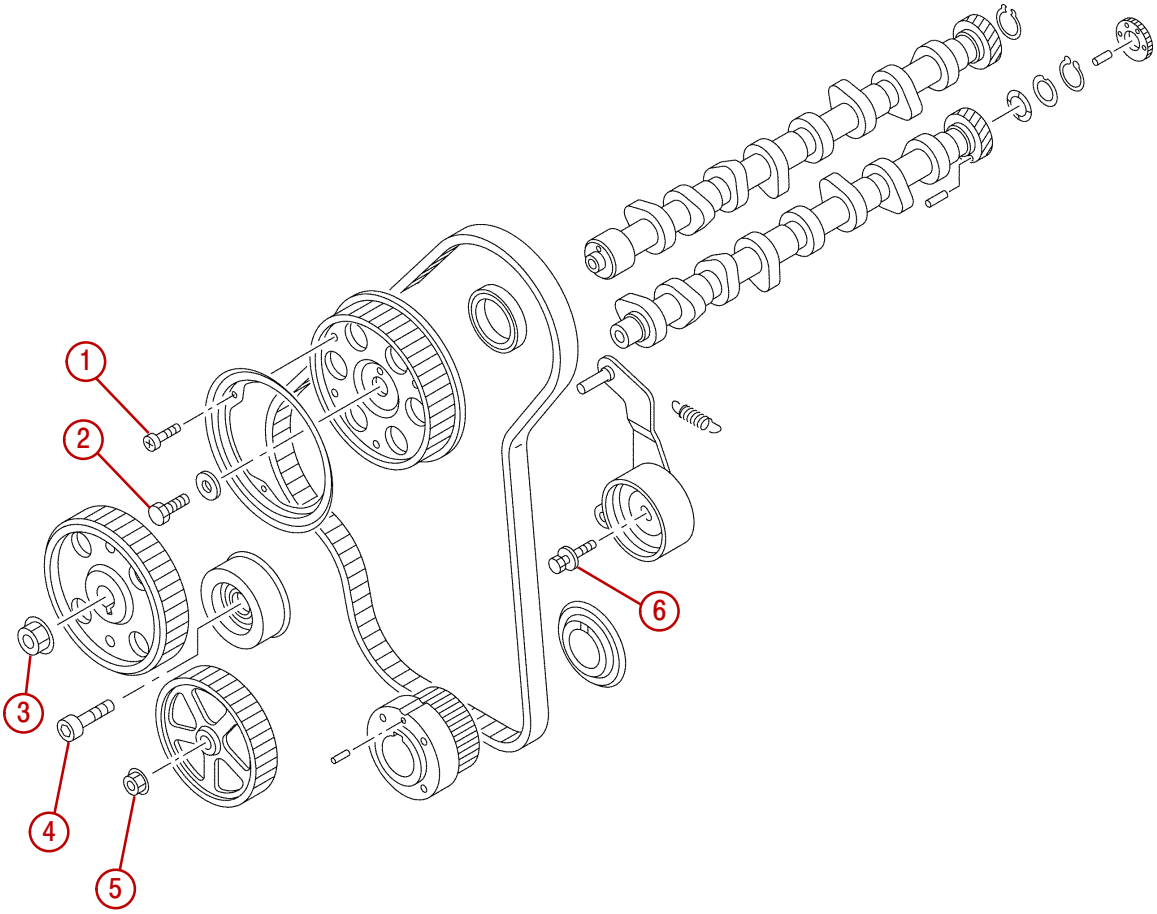

77084

	Description		Nm	lb-in.	lb-ft
1	Screw, Flange	M4 x 0.7	2.5	22	
2	Bolt, Camshaft Pulley	M12 x 1.5	64		47
3	Nut, Injection Pump Pulley	M14 x 1.5	69		51
4	Bolt, Idler	M12 x 1.25	80		59
5	Nut, Oil Pump Pulley	M10 x 1.25	44		32
6	Bolt, Tensioner	M10 x 1.5	38		28

CRANKSHAFT, CONNECTING ROD, FLYWHEEL AND CRANK PULLEY

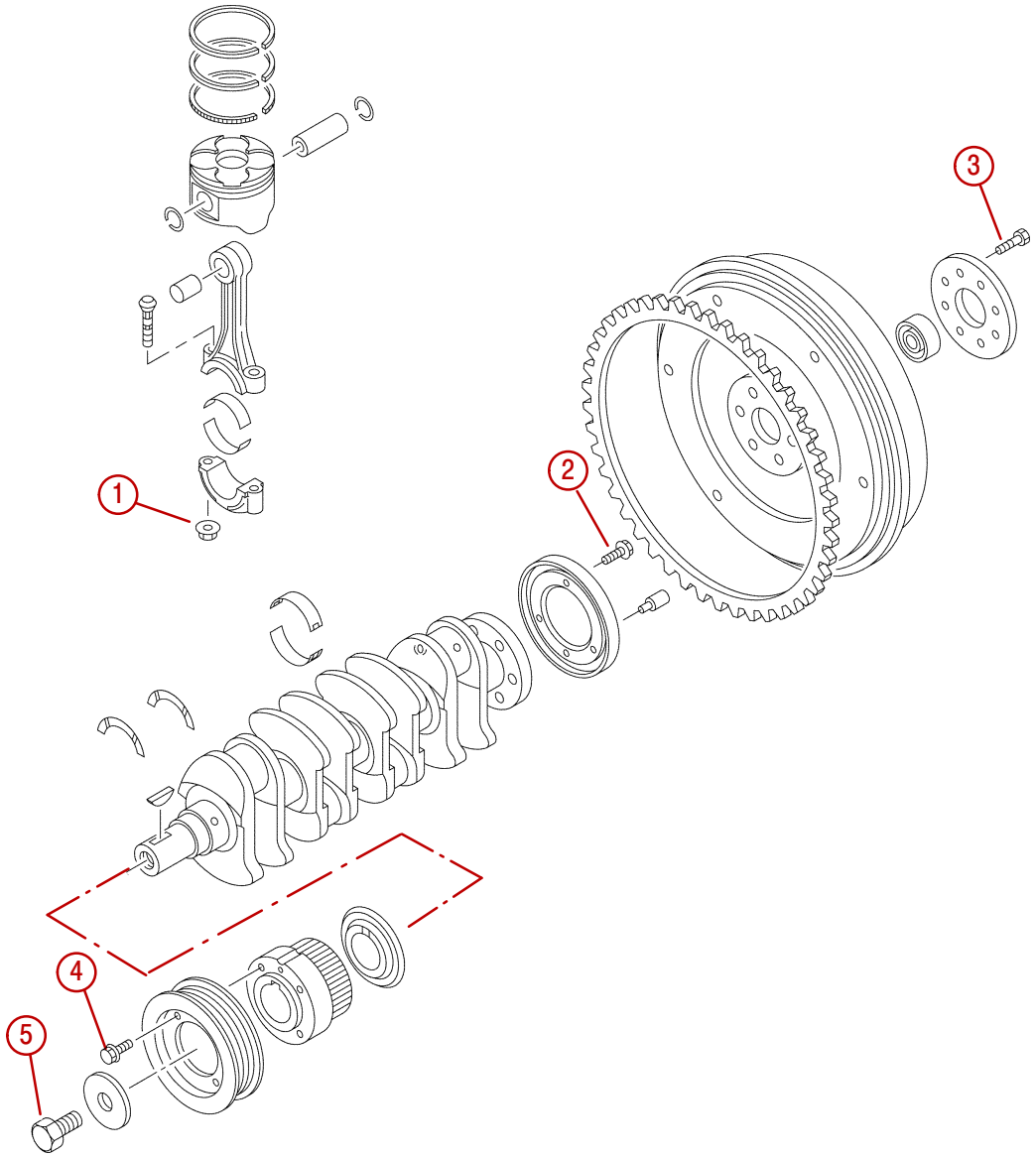

77085

	Description		Nm	lb-in.	lb-ft
1	Nut, Connecting Rod [1]	3/8 24UNF			
		First Pass	25		18
		Final Pass	100°		
2	Bolt, Rotor	M6 x 1.0	10.8 Nm		
3	Bolt, Flywheel [2]	M11 x 1.25	29 + 60°		21 + 60°
4	Bolt, Damper Pulley,	M8 x 1.25	20	177	
5	Bolt, Crank Pulley	M16 x 1.5	196		145

[1] Minimum torque–check after tightening: 54 - 88 Nm (40 - 64 lb-ft).

[2] DO NOT reuse flywheel bolts. Replace if removed once. Use locking compound on threads.

INTAKE MANIFOLD, TURBOCHARGER AND HEAT EXCHANGER

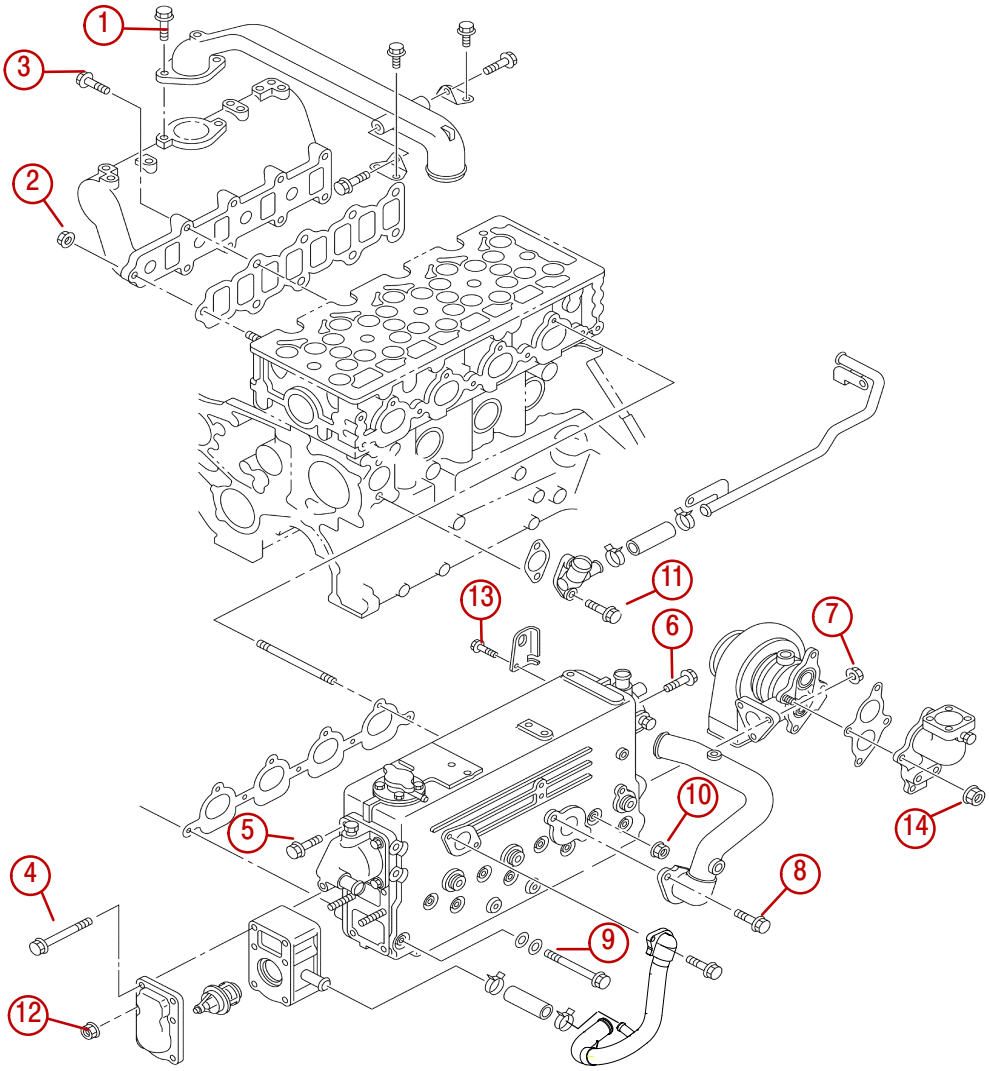

77086

	Description		Nm	lb-in.	lb-ft
1	Bolt, Inlet Pipe	M8 x 1.25	19	168	
2	Nut, Inlet Manifold	M8 x 1.25	25		18
3	Bolt, Inlet Manifold	M8 x 1.25	25		18
4	Bolt, Thermostat Housing	M8 x 1.25	24		18
5	Bolt, Heat Exchanger Front Cover	M8 x 1.25	19	168	
6	Bolt, Heat Exchanger Rear Cover	M8 x 1.25	19	168	
7	Nut, Turbocharger	M10 x 1.5	44		32
8	Bolt, Water Pipe	M8 x 1.25	24		18
9	Bolt, Heat Exchanger	M8 x 1.25	19	168	
10	Nut, Heat Exchanger	M8 x 1.25	19	168	
11	Bolt, Suction Pipe	M8 x 1.25	24		18
12	Nut, Housing Cover	M8 x 1.25	24		18
13	Bolt, Engine Lifting Eye	M8 x 1.25	25		18
14	Nut, Exhaust Pipe	M10 x 1.25	44		32

TIMING COVERS, OIL PUMP RETAINER, FRONT AND REAR COVER

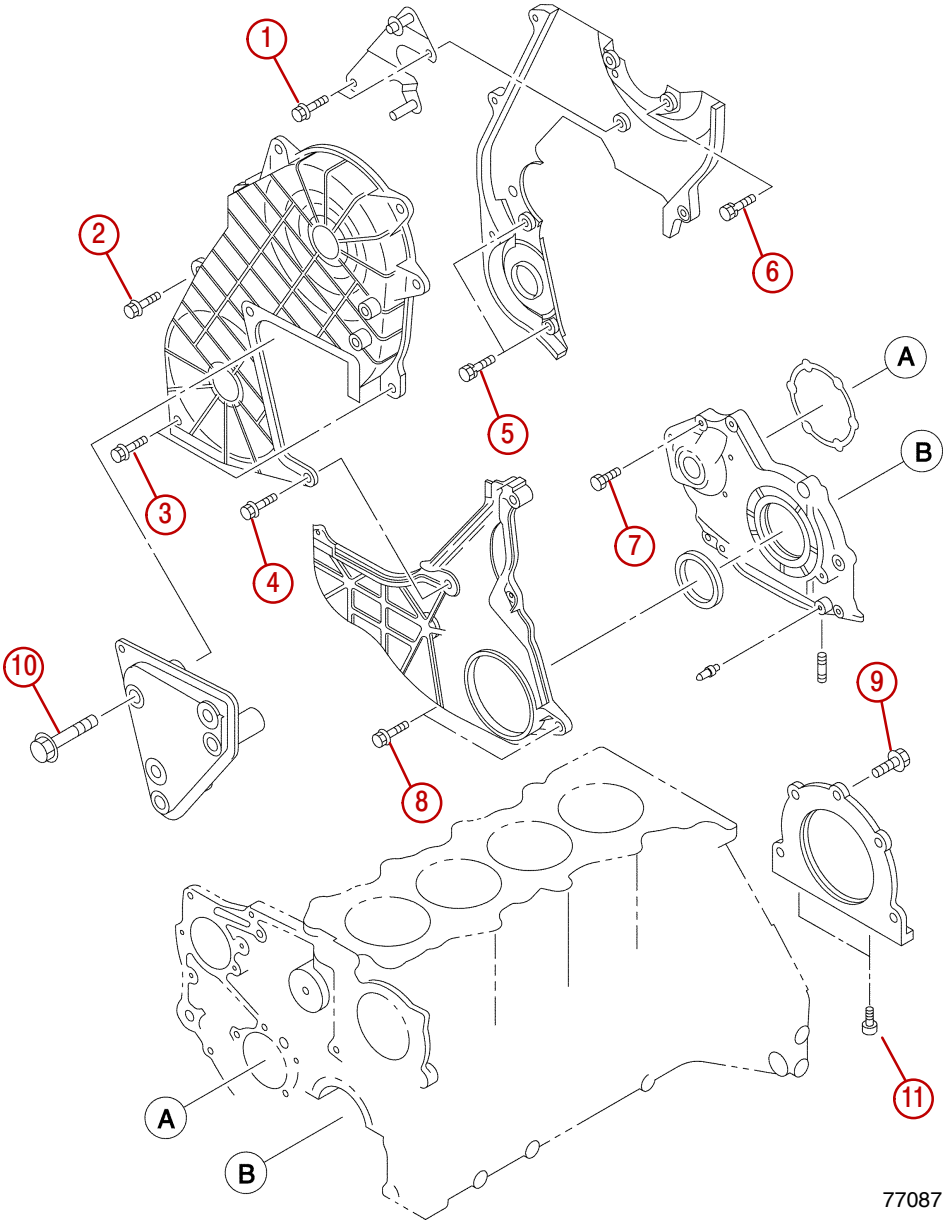

Description			Nm	lb-in.	lb-ft
1	Bolt, Bracket	M6 x 1.0	9.8	87	
2	Bolt, Timing Cover	M6 x 1.0	9.8	87	
3		M6 x 1.0	9.8	87	
4		M6 x 1.0	9.8	87	
5	Bolt, Dust Cover	M6 x 1.0	9.8	87	
6		M6 x 1.0	9.8	87	
7	Bolt, Oil Pump Retainer	M6 x 1.0	9.8	87	
8	Bolt, Timing Cover	M6 x 1.0	9.8	87	
9	Bolt, Rear Oil Seal Retainer	M6 x 1.0	9.8	87	
10	Bolt, Engine Plate	M10 x 1.5	40		30
11	Bolt, Rear Oil Seal Retainer	M6 x 1.0	9.8	87	

OIL FILTER AND ENGINE WATER OUTLET

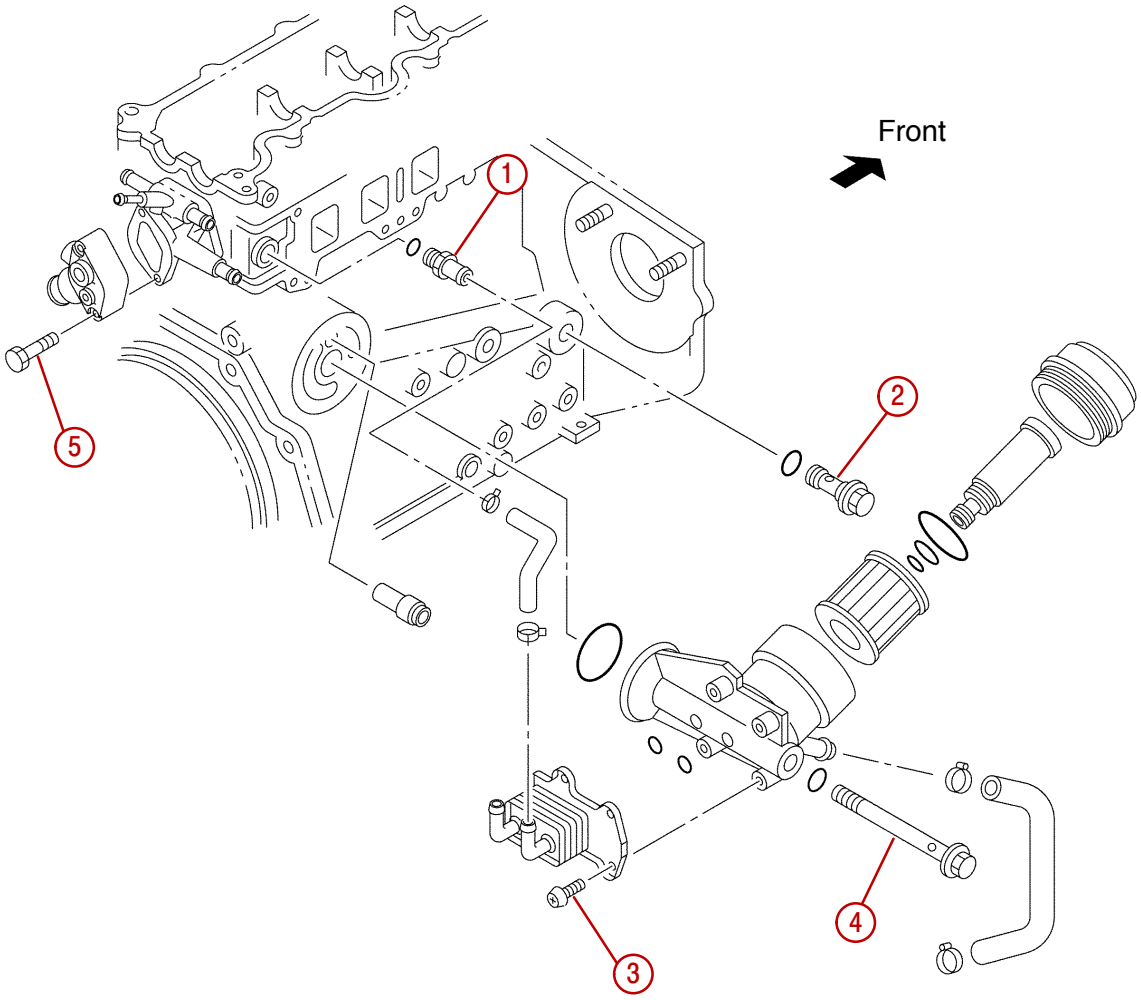

77088

	Description		Nm	lb-in.	lb-ft
1	Fitting, Oil Cooler				
2	Valve, Relief	M24 x 1.5	39		29
3	Bolt, Oil Cooler		12	106	
4	Bolt, Oil Filter	M20 x 1.5	110		81
5	Bolt, Water Outlet	M8 x 1.25	24		18

FUEL INJECTORS AND RELATED PARTS

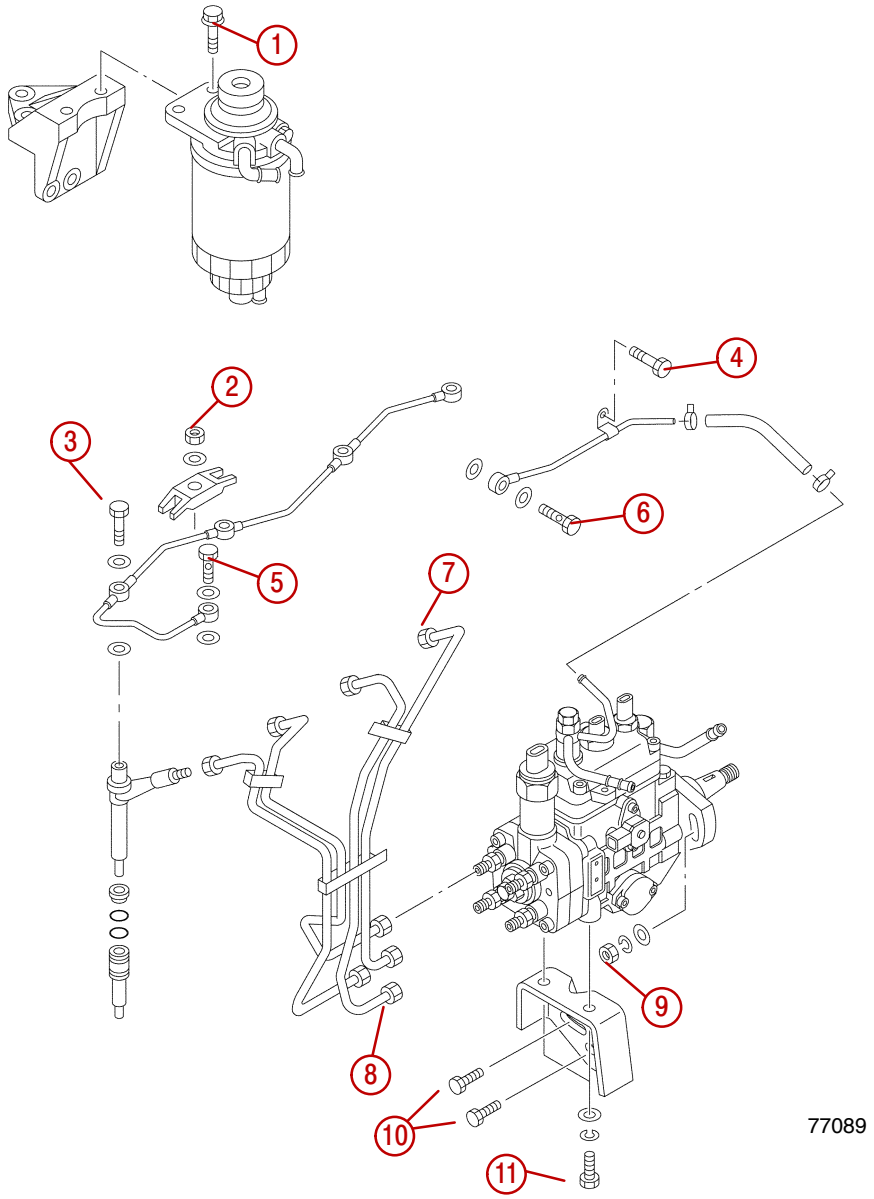

	Description		Nm	lb-in.	lb-ft
1	Bolt, Filter	M8 x 1.25	19	168	
2	Nut, Injector Bracket	M10 x 1.25	22		16
3	Bolt, Injector Hollow	M8 x 1.0	12.5	111	
4	Bolt, Fuel Return Pipe Clamp	M6 x 1.0	9.8	87	
5	Bolt, Fuel Return Hollow	M8 x 1.25	15	133	
6		M8 x 1.25	15	133	
7	Nut, Injection Pipe Sleeve	M12 x 1.5	20	177	
8		M12 x 1.5	20	177	
9	Nut, Injection Pump	M8 x 1.25	20	177	
10	Bolt, Bracket To Mount	M8 x 1.25	19	168	
11	Bolt, Bracket To Injection Pump	M10 x 1.5	38		28

ALTERNATOR, TENSIONER AND BRACKET

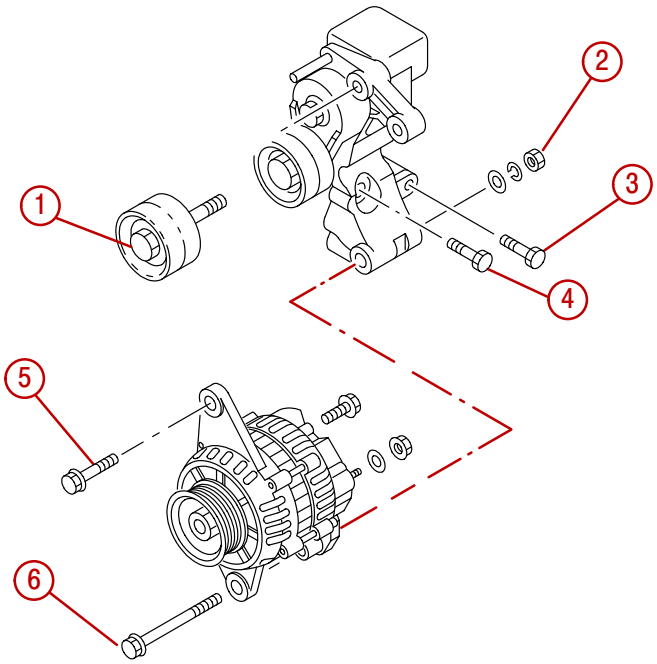

	Description		Nm	lb-in.	lb-ft
1	Bolt, Automatic Tensioner		50		37
2	Nut, Alternator	M10 x 1.25	46		34
3	Bolt, Alternator Bracket	M10 x 1.5	48		35
4	Bolt, Alternator Bracket	M14 x 2.0	68		50
5	Bolt, Alternator-To-Bracket	M8 x 1.25	19	168	
6	Bolt, Alternator Lower Mounting	M10 x 1.25	46		34

INTERCOOLER AND RELATED PARTS

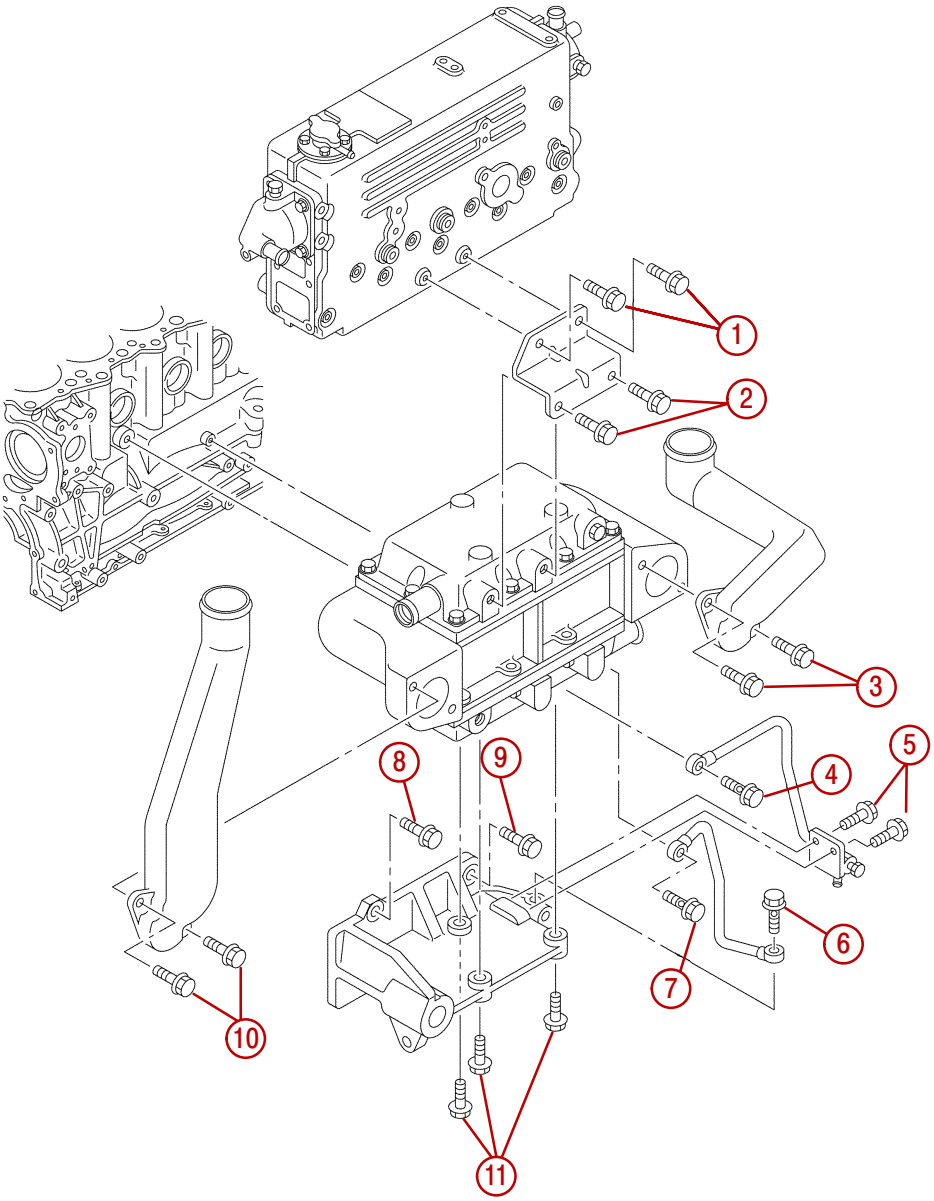

Description			Nm	lb-in.	lb-ft
1	Bolt, Bracket	M10 x 1.5	44		32
2		M10 x 1.5	44		32
3	Bolt, Air Duct	M8 x 1.25	19	168	
4	Bolt, Eye	M12 x 1.25	27		20
5	Bolt, Water Drain Bracket	M8 x 1.25	24		18
6	Bolt, Eye	M8 x 1.25	15	133	
7	Bolt, Eye	M12 x 1.25	27		20
8	Bolt, Port Mount Bracket	M10 x 1.5	51		38
9		M10 x 1.5	51		38
10	Bolt, Air Duct	M8 x 1.25	19	168	
11	Bolt, Intercooler	M10 x 1.5	44		32

Standard Torque Values

HEX HEAD BOLT

IMPORTANT: The tightening torque values given in the table below are applicable to bolts and fasteners unless otherwise specified.

NOTICE
Unit Of Measurement: Nm (lb-ft)

Identification	4	8 8	9
Diameter x Thread Pitch (mm)			
M6 x 1.0	3.9 - 7.8 (3 - 6)	4.9 - 9.8 (4 - 7)	–
M8 x 1.25	7.8 - 17.7 (6 - 13)	11.8 - 22.6 (9 - 17)	16.7 - 30.4 (12 - 22)
M10 x 1.25	20.6 - 34.3 (15 - 25)	27.5 - 46.1 (20 - 34)	37.3 - 62.8 (28 - 46)
* M10 x 1.5	19.6 - 33.4 (14 - 25)	27.5 - 45.1 (20 - 33)	36.6 - 59.8 (17 - 44)
M12 x 1.25	49.1 - 73.6 (36 - 54)	60.8 - 91.2 (45 - 67)	75.5 - 114.0 (56 - 84)
*M12 x 1.75	45.1 - 68.7 (33 - 51)	56.9 - 84.4 (42 - 62)	71.8 - 107.0 (53 - 79)
M14 x 1.5	76.5 - 115.0 (56 - 85)	93.2 - 139.0 (69 - 103)	114.0 - 171.0 (84 - 126)
*M14 x 2.0	71.6 - 107.0 (53 - 79)	88.3 - 131.0 (65 - 97)	107.0 - 160.0 (79 - 118)
M16 x 1.5	104.0 - 157.0 (77 - 116)	135.0 - 204.0 (100 - 151)	160.0 - 240.0 (118 - 177)
*M16 x 2.0	100.0 - 149.0 (74 - 110)	129.0 - 194.0 (95 - 143)	153.0 - 230.0 (113 - 170)
M18 x 1.5	151.0 - 226.0 (111 - 167)	195.0 - 293.0 (144 - 216)	230.0 - 345.0 (170 - 255)
*M18 x 2.5	151.0 - 226.0 (111 - 167)	196.0 - 294.0 (145 - 217)	231.0 - 346.0 (170 - 255)
M20 x 1.5	206.0 - 310.0 (152 - 229)	270.0 - 405.0 (199 - 299)	317.0 - 476.0 (234 - 339)
*M20 x 2.5	190.0 - 286.0 (140 - 211)	249.0 - 375.0 (184 - 277)	293.0 - 440.0 (176 - 325)
M22 x 1.5	251.0 - 414.0 (185 - 306)	363.0 - 544.0 (268 - 401)	425.0 - 637.0 (314 - 470)
*M22 x 2.5	218.0 - 328.0 (161 - 242)	338.0 - 507.0 (249 - 374)	394.0 - 592.0 (291 - 437)
M24 x 2.0	359.0 - 540.0 (265 - 399)	431.0 - 711.0 (318 - 525)	554.0 - 831.0 (409 - 613)
*M24 x 3.0	338.0 - 507.0 (249 - 374)	406.0 - 608.0 (300 - 449)	521.0 - 782.0 (385 - 577)

An asterisk (*) indicates that the bolts are used for female threaded parts that are made of soft materials such as casting.

FLANGED HEAD BOLT

IMPORTANT: The tightening torque values given in the table below are applicable to bolts and fasteners unless otherwise specified.

NOTICE
Unit Of Measurement: Nm (lb-ft)

Identification	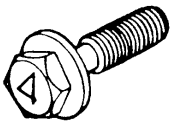		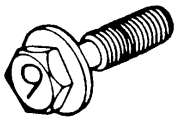
Diameter x Thread Pitch (mm)			
M6 x 1.0		6.6 - 12.2 (5 - 9)	–
M8 x 1.25	10.5 - 19.6 (8 - 15)	15.3–28.4 (11 - 21)	18.1 - 33 (15 - 25)
M10 x 1.25	23.1 - 38.5 (17 - 28)	35.4 - 58.9 (26 - 43)	42.3 - 70.5 (31 - 52)
***M10 x 1.5**	22.3 - 37.2 (16 - 27)	34.5 - 57.5 (25 - 42)	40.1 - 66.9 (30 - 49)
M12 x 1.25	54.9 - 82.3 (41 - 61)	77.7 - 117.0 (57 - 86)	85.0 - 128.0 (63 - 94)
***M12 x 1.75**	51.0 - 76.5 (38 - 56)	71.4 - 107.0 (53 - 79)	79.5 - 119.0 (59 - 88)
M14 x 1.5	83.0 - 125.0 (61 - 92)	115.0 - 172.0 (85 - 127)	123.0 - 185.0 (91 - 137)
***M14 x 2.0**	77.2 - 116.0 (57 - 86)	108.0 - 162.0 (80 - 120)	116.0 - 173.0 (86 - 128)
M16 x 1.5	116.0 - 173.0 (86 - 128)	171.0 - 257.0 (126 - 190)	177.0 - 265.0 (131 - 196)
***M16 x 2.0**	109.0 - 164.0 (80 - 121)	163.0 - 244.0 (120 - 180)	169.0 - 253.0 (125 - 187)

A bolt with an asterisk (*) is used for female screws of soft material such as cast iron.

Special Tools

Lock	91-883861
Description: Locks flywheel	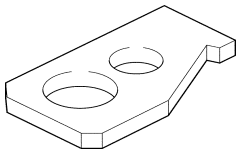

Remover	91-883844
Description: To remove injection pump drive pulley	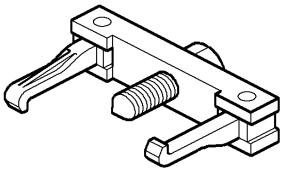

Adapter	91-883845
Description: Used in combination with typical valve spring compressor to compress valve spring	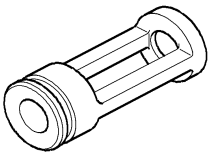

Installer / Remover	91-883846
Description: Install and remove valve guide	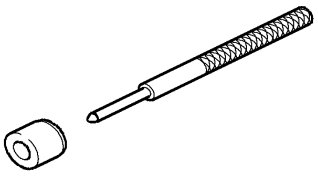

Installer	91-883847
Description: Install front crankshaft oil seal without crankshaft	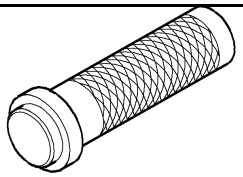

Installer	91-883848
Description: Install front crankshaft oil seal with crankshaft	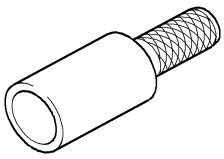

Special Tools (continued)

Installer	91-883849
Description: Install oil pump seal in oil pump cover	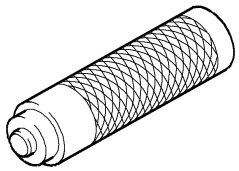

Compressor	91-883850
Description: Valve compressor to adjust valve clearance	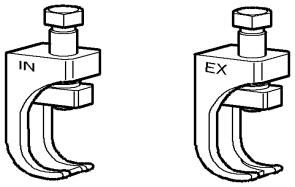

Wrench	91-883851
Description: To remove and install oil filter	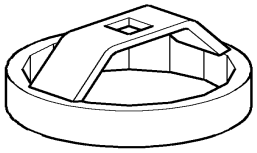

Adapter	91-883852
Description: Adapter to check compression pressure	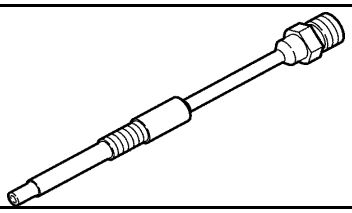

Locking Tool	91-883853
Description: To remove and install exhaust camshaft	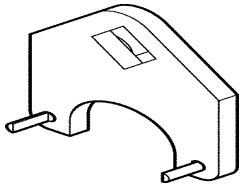

Installer	91-883854
Description: Install valve stem seal	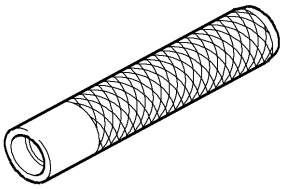

Special Tools (continued)

Installer	**91-883855**
Description: Install camshaft oil seal	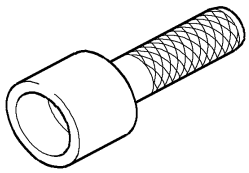

Remover	**91-883856**
Description: Removes injector sleeve	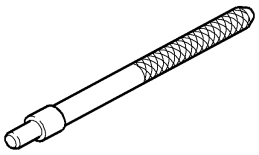

Installer	**91-883857**
Description: Installs injector sleeve	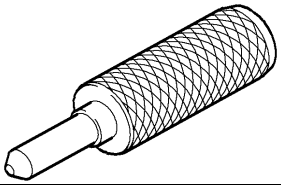

Installer	**91-883858**
Description: Installs injector seal	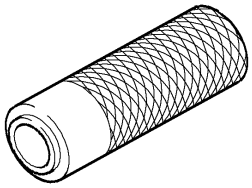

Aligner	**91-883859**
Description: Aligns cylinder block to oil pan upper	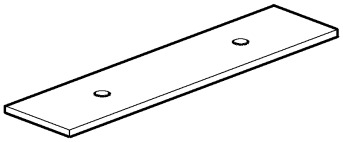

Installer	**91-883860**
Description: Positions and installs oil jet pipe to cylinder block	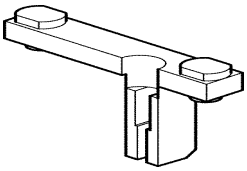

Special Tools (continued)

Dial Indicator	91-58222A1
Description: Measures various distances on engines	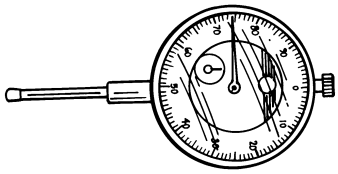 73429

Piston Ring Expander	91-24697
Description: Installs and removes piston rings	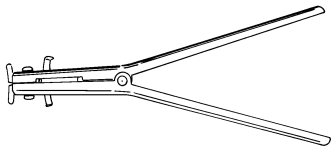 73700

Metric Dial Indicator Adaptor	91-801333510
Description: Used with metric dial indicator to set fuel injector pump timing	 73801

SAE Dial Indicator Adaptor	91-816997A1
Description: Used with SAE dial indicator to set fuel injector pump timing	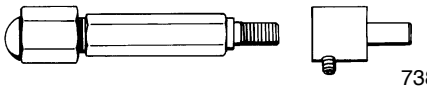 73802

Support Block	91-814812A1
Description: Used as a base for the Dial Indicator	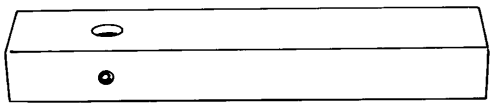 73803

Snap-On Special Tools

Description	Part Number
Compression Gauge	Not Available At Time Of Printing
Torque Angle Gauge (Degree Wheel Torquing)	TA360

Kent-Moore Special Tools

Can Be Ordered From:

Kent-Moore Tools, Inc.
29784 Little Mack
Roseville, MI 48066
Phone: (313) 574 - 2332

Description	Part Number
Valve Spring Compressor	J-8062
Piston Ring Compressor	J-8307

Lubricants / Sealants / Adhesives

Description	Where Used	Method of Use	Part Number
Needle Bearing Assembly Lubricant [1]	Rod bearing and crankshaft journal	Coat surfaces	92 - 802868A1
Molybdenum Disulfide Grease	Piston skirt	Coat the two skirts on each piston.	Obtain Locally
Loctite 5699	Between front camshaft bracket and carrier	Apply to contact surfaces as indicated	Obtain Locally
	Half moon packing plugs in camshaft bracket	Apply to both sides of plug	
	Between camshaft carrier and valve cover	Apply to sealing surfaces as indicated	
	Between oil pump retainer and cylinder block	Apply a bead to sealing surfaces as specified	
	Water fitting for oil cooler coolant hose at block	Thread length	
Loctite 5999	Upper oil pan to block; lower oil pan to upper oil pan	Apply a bead to sealing surfaces as specified	Obtain Locally
Loctite 572 or Threebond© 1207C	Anode plug	Thread length	Obtain Locally
Loctite 262	Drain plugs	Thread length	
Loctite 262, Loctite 962T or Threebond© 1386	Oil spray nozzle	Around outside of nozzle	Obtain Locally
Engine Oil	As indicated throughout SECTION, in steps and tables	Coat surfaces	Obtain Locally
Silicone Grease	Oil seal	Coat lips	Obtain Locally

[1] Used in a mixture of 20% SAE30W engine oil and 80% Needle Bearing Lubricant.

Description

Engine Rotation

NOTE: *Engine rotation is described when observed from the rear of the engine (transom end) looking forward (water pump end).*

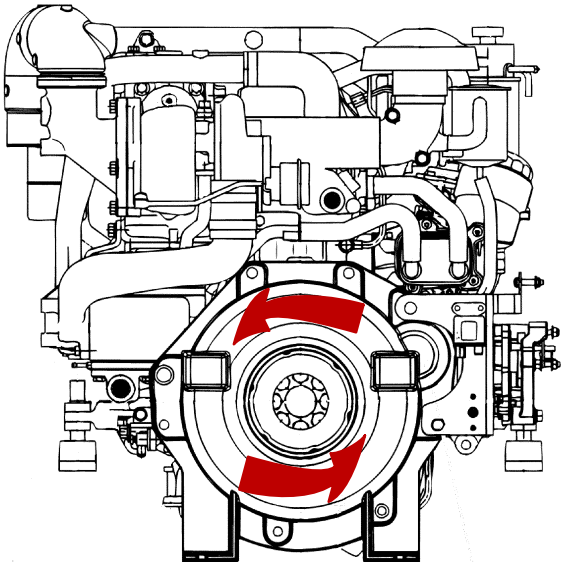

77122

Left-hand Rotation

Engine Firing Order

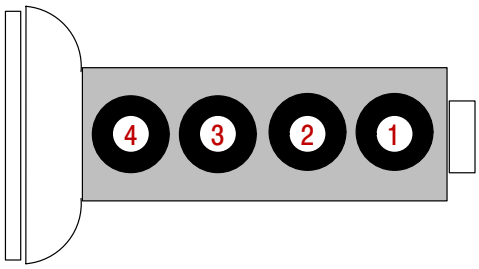

Firing Order: 1 - 3 - 4 - 2

Cylinder Head Torque Sequence And Specifications

IMPORTANT: Lubricate the underside of all bolt heads and threads with clean engine oil.

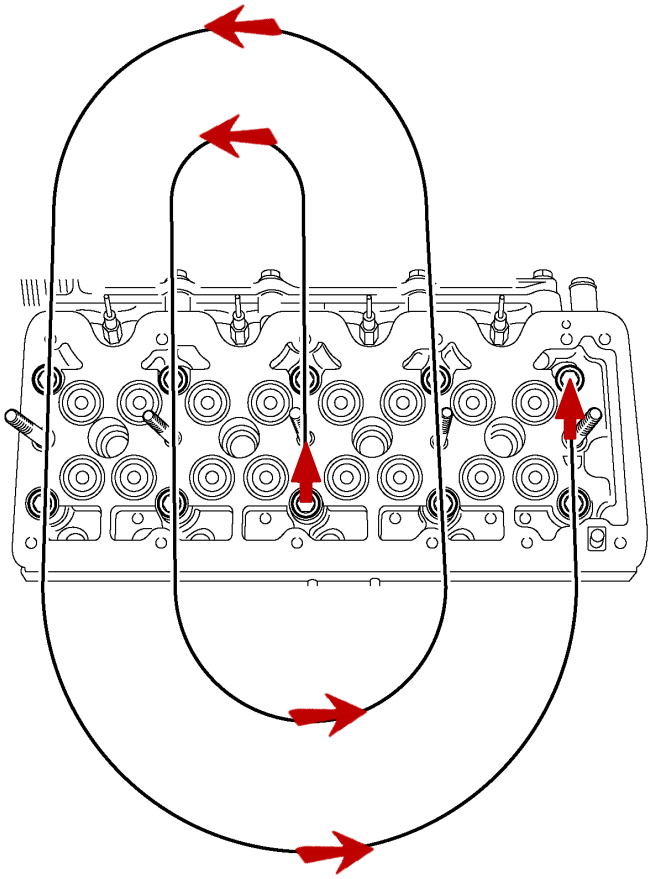

77120

1. **First Pass:** Torque bolts in sequence. Repeat sequence using same specification (to ensure better preload).
2. **Second Pass:** In sequence tighten each bolt through an angle of 60°.
3. **Final Pass:** In sequence tighten each bolt through ANOTHER angle of 60°.

Description		Nm	lb-in.	lb-ft
Bolt, Cylinder Head	M12 x 1.5			
	First Pass	39		29
	Second Pass	60°		
	Final Pass	60°		

Lubrication Flow Diagram

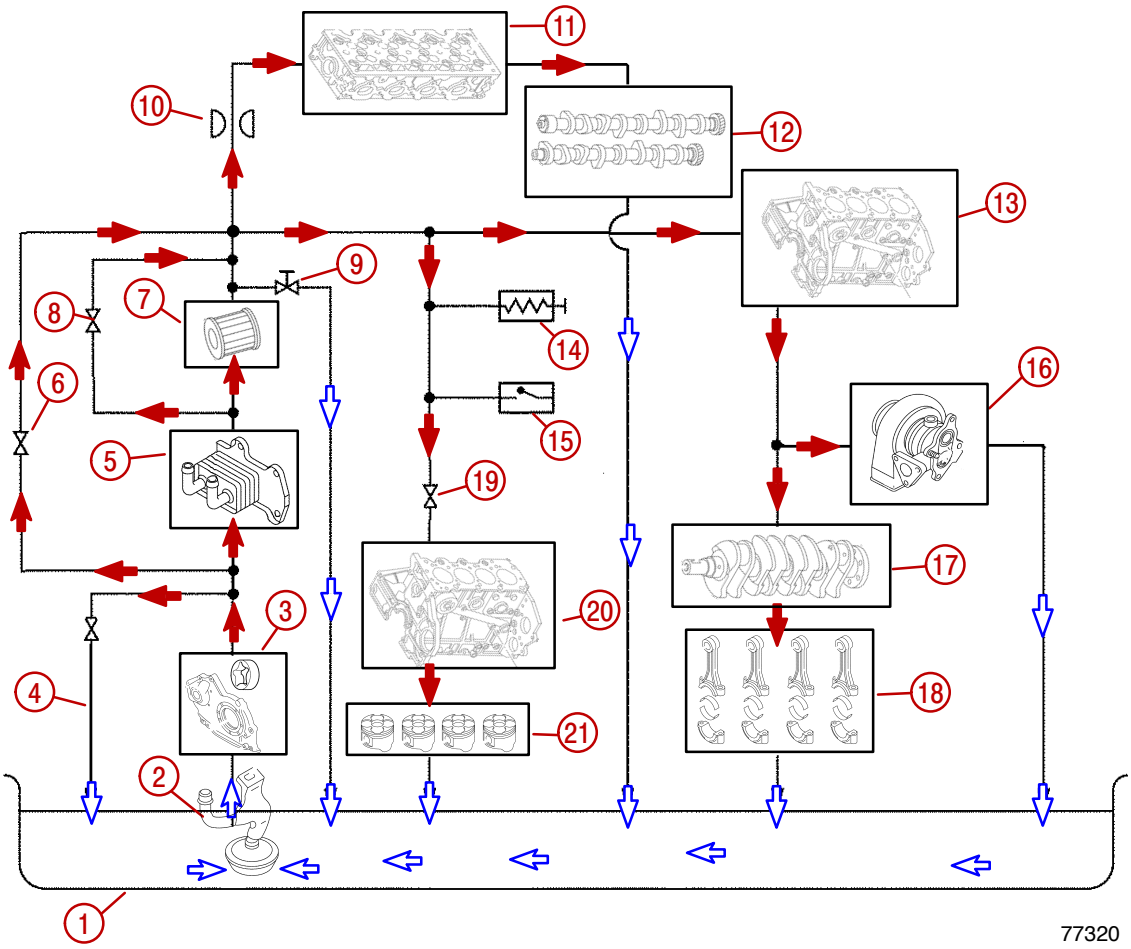

Unpressured Oil Pressurized Oil

1 - Oil Pan
2 - Oil Pickup/Screen
3 - Oil Pump
4 - Relief Valve, 690 kPa (100 psi)
5 - Oil Cooler
6 - Relief Valve, 250 kPa (36 psi)
7 - Oil Filter
8 - Bypass Valve, 98 kPa (14.2 psi)
9 - Oil Drain
10 - Sized Orifice, 1.5 mm (.059 in.)
11 - Cylinder Head Oil Gallery
12 - Camshaft Bearings
13 - Main Oil Gallery
14 - Oil Pressure Sender
15 - Oil Pressure Switch, Opens at 31 - 52 kPa (4.5 - 7.5 psi)
16 - Turbocharger
17 - Crankshaft Bearings
18 - Connecting Rod Bearings
19 - Check Valve, 250 kPa (36 psi)
20 - Sub Oil Gallery
21 - Piston Oiling Jets

Examples of Bearing Failures

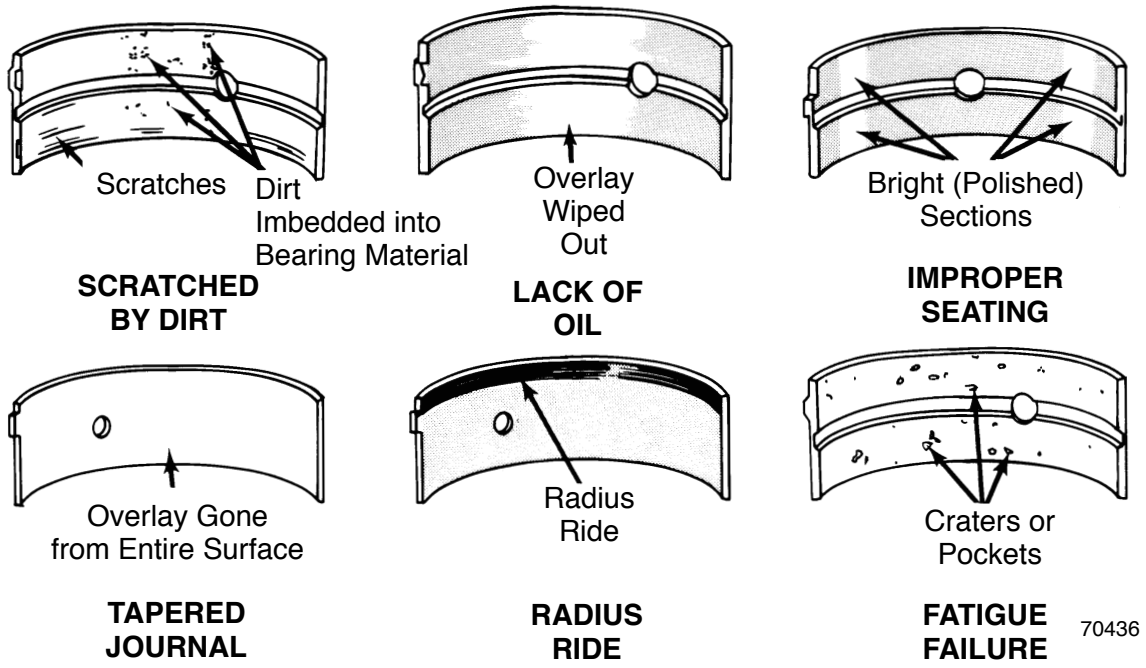

Compression Testing Procedure

Periodically check engine compression pressure. Lowering of pressure causes loss of power, greater fuel consumption, smoke at the exhaust, low acceleration, unsteady slow idle, difficulty in starting and bearing seizure because of engine overheating.

1. Start engine and allow it to reach normal operating temperature.
2. Stop engine and shut off fuel supply.
3. Ensure that battery is fully charged.

IMPORTANT: To achieve the cranking rpm needed (250 rpm minimum) for a proper compression test it will be necessary to remove all of the glow plugs or hole plugs prior to testing.

4. Remove all glow plugs or plugs in glow plug holes.

5. Clean glow plug bore and install compression tester adapter in Cylinder number 1.

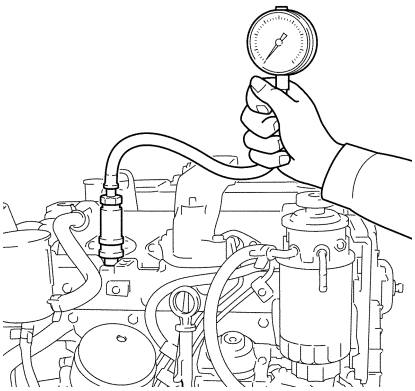

77123

6. Connect gauge to adapter and set gauge to zero reading.
7. Operate starter (engine should be cranking at approximately 250 rpm) and check compression gauge reading.

Description		MPa	psi
Compression at 250 Minimum rpm	Standard	2.8	406
	Limit	2.5	363
Difference Between Cylinders		Not Available At Time Of Printing	

8. Readings lower than specified, or differences between cylinders greater than specified, indicate engine problems exist (such as faulty rings, valves, cylinders and pistons). Refer to appropriate sections and repair as needed.
9. Remove compression gauge and adapter.
10. Apply anti-seize compound to threads and install glow plugs, or hole plugs if equipped. Torque each glow plug or hole plug.

Description	Where Used	Method of Use	Part Number
Anti-seize Compound	Glow Plugs	Thread length	Obtain Locally

Description	Nm	lb-in.	lb-ft
Glow Plug / Hole Plug	20		15

11. Install electrical connectors on glow plug terminals, if equipped.

Valve Cover

Removal

1. Remove bolts retaining intake manifold air duct to intake manifold and valve cover.
2. Loosen clamps on port side of intake manifold air duct connection hose.
3. Remove intake manifold air duct.

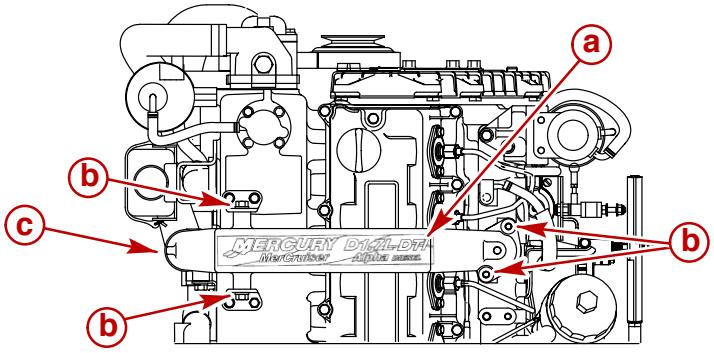

77325

a - Air Duct
b - Bolts
c - Clamps

⚠ CAUTION

Safety glasses should be worn while working on fuel injection system. The fuel injection pump will generate pressures in excess of 13,790 - 27,580 kPa (2000 - 4000 psi). Use caution when removing injectors, injector lines or bleeding air from injection system.

⚠ CAUTION

Keep injector and injection pump fittings clean. Do not allow dirt to enter fittings when removing or installing pipes. Dirt will cause injectors or injection pump to malfunction.

4. Remove fuel injector pipes.
5. Disconnect hose from PCV (Positive Crankcase Ventilation) oil separator.

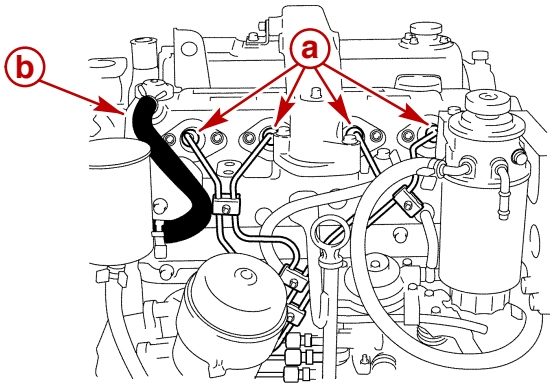

77314

a - Injector Pipes
b - Hose

6. Remove injector covers.

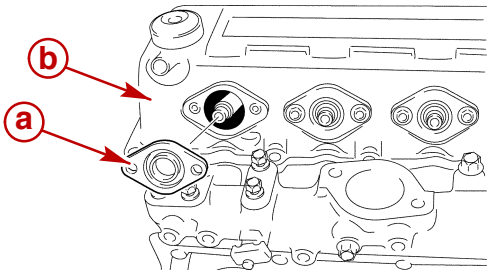

77290

a - Injector Cover
b - Valve Cover

7. Remove front lifting eye.
8. Remove top two bolts in upper timing cover.
9. Remove valve cover bolts.
10. Remove valve cover.

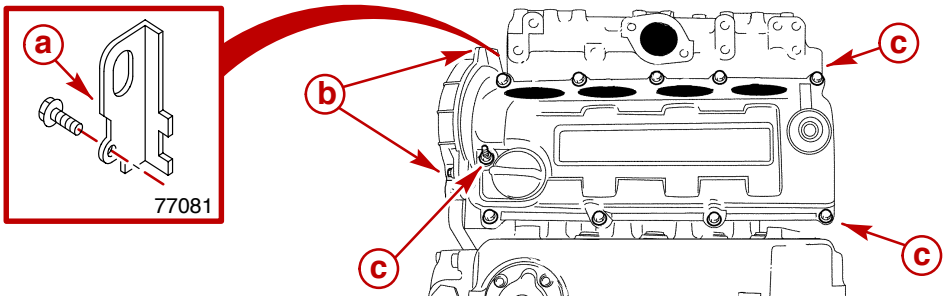

77289

a - Lifting Eye
b - Timing Cover Bolts (2)
c - Valve Cover Bolts (9)

Cleaning

1. Clean gasket material and oil from cylinder head sealing surfaces.
2. Clean valve cover and remove gasket material from sealing surfaces.

Inspection

1. Inspect sealing surfaces for deep nicks and scratches.
2. Replace or repair parts as needed.

Installation

1. Apply sealant, as shown, to surfaces of the camshaft carrier where indicated.

IMPORTANT: DO NOT cover oil return bore with sealant.

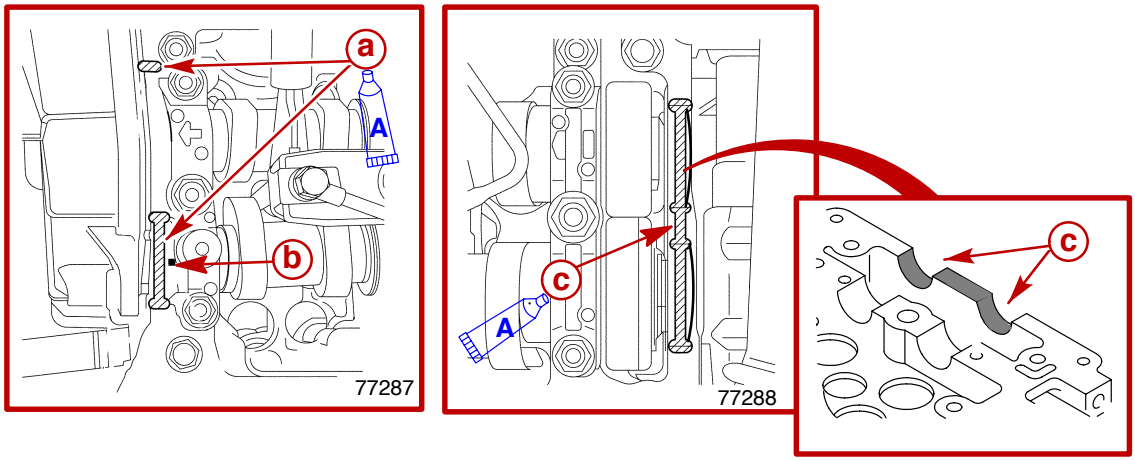

a - Sealant, Front Of Carrier
b - Oil Return Hole
c - Sealant, Half Moon Recess

	Description	Where Used	Method of Use	Part Number
A	Loctite 5699	Between camshaft carrier and valve cover, including half-moon recesses	Apply to sealing surfaces as specified	Obtain Locally

2. Place valve cover gasket on valve cover. Position O-ring seal inside recess in valve cover for valve cover bolt.

NOTE: *O-ring seal is inside cover on brass insert with recess.*

3. Install valve cover on camshaft carrier.
4. Install valve cover bolts. Temporarily hand tighten bolts.
5. Install the two timing cover bolts. Temporarily hand tighten bolts.
6. Install new injector covers on valve cover. Torque bolts.
7. Torque valve cover bolts.
8. Torque upper timing cover bolts.

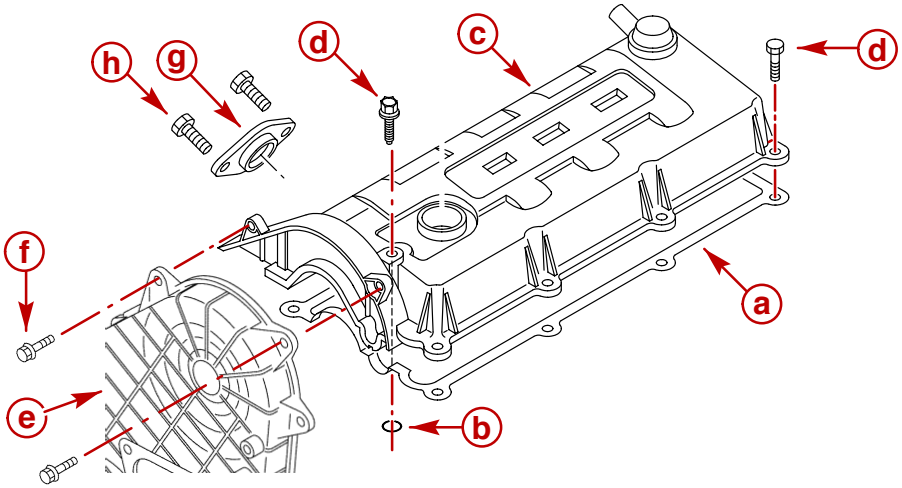

77081 77372

a - Gasket
b - O-ring Seal (Inside Cover)
c - Valve Cover
d - Valve Cover Bolt (9)
e - Timing Cover
f - Timing Cover Bolt (2)
g - Injector Cover
h - Injector Cover Bolt (8)

Description		Nm	lb-in.	lb-ft
Bolt, Valve Cover	M6 x 1.0	9.8	84	
Bolt, Injector Cover	M6 x 1.0	9.8	84	
Bolt, Timing Cover	M6 x 1.0	9.8	84	

⚠ CAUTION

Do not bend fuel injector pipes. Bending may cause metal to flake off inside pipes, causing injectors or injection pump to malfunction.

9. Install injector pipes and torque sleeve nuts.
10. Install injector pipe clamps and torque bolts.
11. Install intake manifold air duct using a new gasket. Torque bolts.
12. Tighten air duct hose clamps securely.
13. Install front engine lifting eye. Torque bolt.
14. Connect hose from PCV oil separator to valve cover.

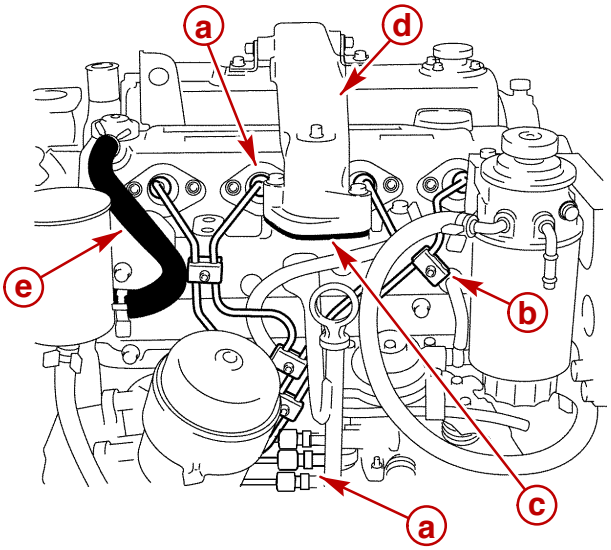

77314

a - Injector Pipes
b - Clamps
c - Gasket
d - Air Duct
e - Hose

Description		Nm	lb-in.	lb-ft
Nut, Injector Pipe Sleeve	M12 x 1.5	20		15
Clamp, Injector Pipe		9.8	84	
Bolt, Intake Manifold Air Duct	M8 x 1.25	19	168	
Bolt, Engine Lifting Eye	M8 x 1.25	25		18

Camshafts

Exploded View

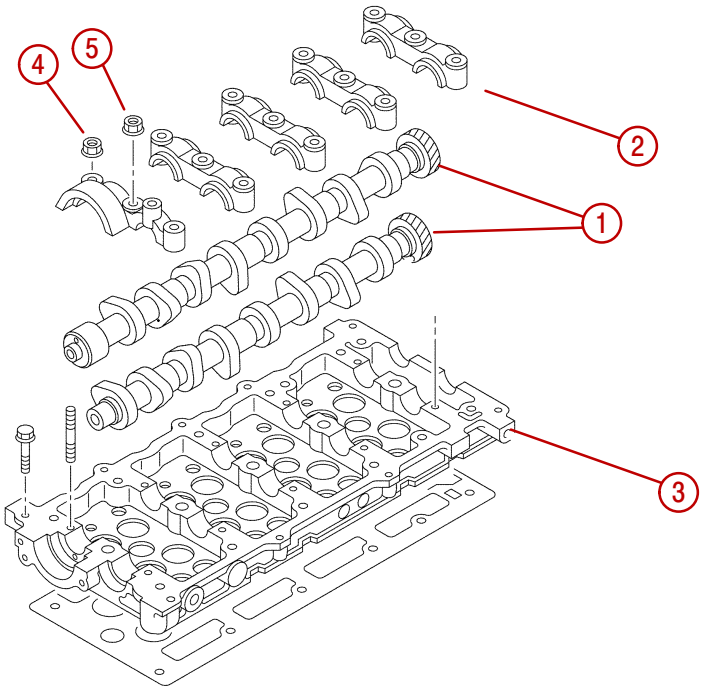

77308

1 - Camshafts
2 - Camshaft Brackets
3 - Camshaft Carrier
4 - Nut, M8
5 - Nut, M10

Removal

1. Remove valve cover.
2. Remove the 5 hollow bolts and seal washers. Remove fuel return inner pipe.

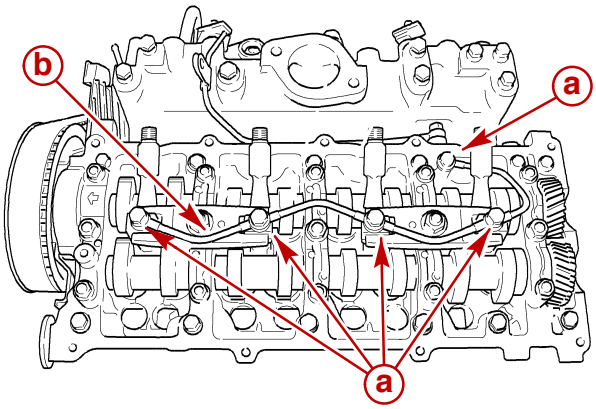

77160

a - Hollow Bolts
b - Fuel Return Inner Pipe

3. Remove fuel injectors.
4. Remove timing belt covers.

⚠ CAUTION
Avoid engine damage. Ensure that engine is on TDC and timing marks are properly aligned.

5. Remove timing belt.
6. Hold the camshaft pulley with TDC alignment bolt and remove camshaft pulley bolt.
7. Remove TDC alignment bolt and remove camshaft pulley.

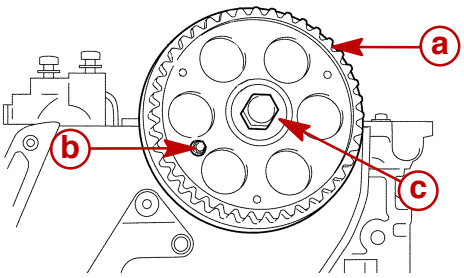

77163

a - Camshaft Pulley
b - TDC Alignment Bolt, M6
c - Camshaft Pulley Bolt

8. Remove the rear camshaft bracket.

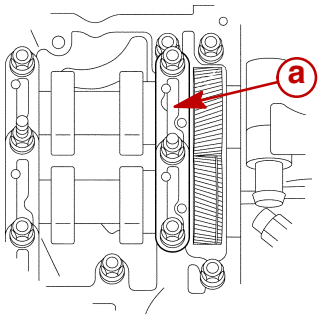

77166

a - Rear Camshaft Bracket

9. Lock exhaust camshaft gear and sub gear together with the locking pin.

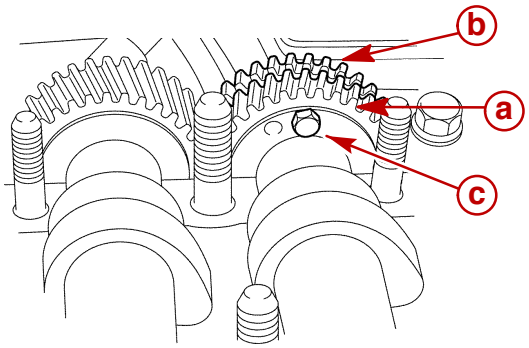

77166

a - Camshaft Gear
b - Sub Gear
c - Adjusting Pin

10. Loosen remaining camshaft bracket nuts in a spiral pattern, as shown, in stages of 1/2 to 1 turn at a time.

IMPORTANT: Camshaft brackets are numbered from one to five. Cast arrows in brackets point to front of engine. Note location and references before removing.

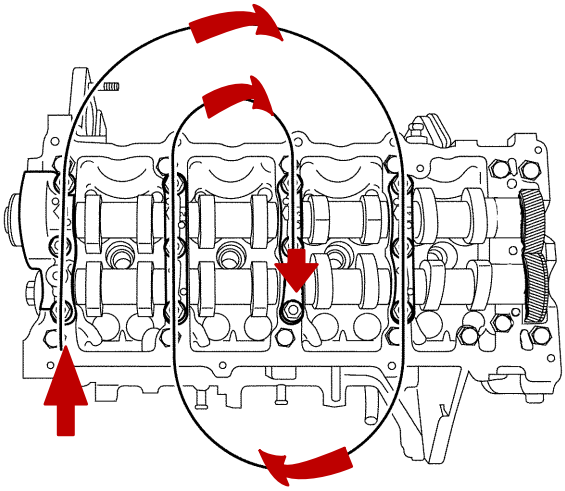

77167

Camshaft Bracket Loosening Pattern

Cleaning

1. Clean camshafts with solvent and dry with compressed air.
2. Clean gasket surfaces and remove sealant residue.

Inspection

1. Check camshafts for wear and replace as necessary.
2. Check bearing brackets for wear and replace as necessary.

CAMSHAFT JOURNAL DIAMETER

1. Use a micrometer to measure each camshaft journal diameter in two directions (X-X) and (Y-Y). If the measured value is less than specified, the camshaft must be replaced.

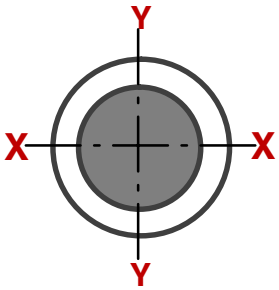

Description		mm (in.)
Journal Diameter	Production	26.939 - 26.960 (1.0605 - 1.0614)
	Limit	–

CAMSHAFT HEIGHT

1. Measure the total cam height (**H**) with a micrometer. Subtract the lobe diameter (**D**). The difference is lobe lift (LL). If the lobe lift is less than the specified limit, the camshaft must be replaced.

180

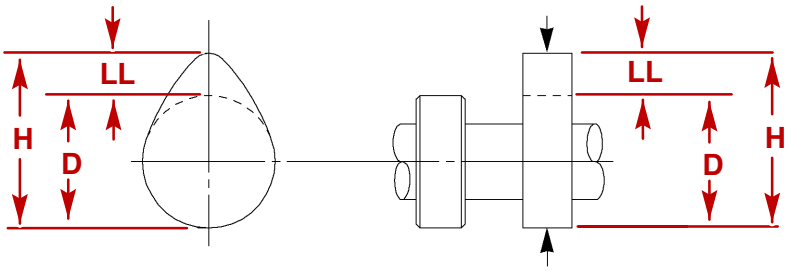

Description		mm (in.)
Lobe Lift (**H** – **D** = **LL**)	Production-Intake	7.80 (0.307)
	Limit-Intake	7.68 (0.302)
	Production-Exhaust	7.95 (0.312)
	Limit-Exhaust	7.77 (0.306)

CAMSHAFT RUNOUT

1. Mount the camshaft on V-blocks.
2. Measure the runout with a dial indicator.
3. If the runout exceeds the specified limit, the camshaft must be replaced.

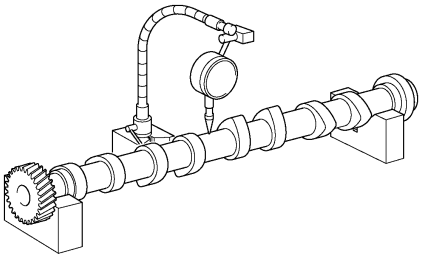

77208

Description		mm (in.)
Camshaft Runout	Production	0.03 (0.0011)
	Limit	0.05 (0.0019)

CLEARANCE BETWEEN JOURNAL AND CAMSHAFT BRACKET

1. Clean the camshaft journals and camshaft brackets.
2. Position camshafts in camshaft carrier. The mark on exhaust camshaft should be between the two marks on intake camshaft and approximately level with upper edge of camshaft carrier.

IMPORTANT: Ensure that engine is on TDC and timing marks are properly aligned.

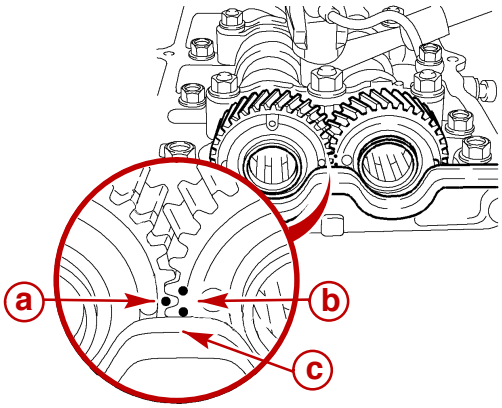

77254

a - Exhaust Camshaft Mark
b - Intake Camshaft Marks
c - Upper Edge Of Carrier

3. Place Plastigage across the full width of the camshaft journals.

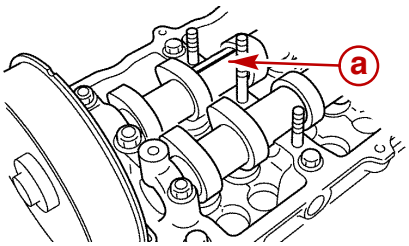

77209

a - Plastigage

4. Install the brackets. Tighten camshaft bracket nuts in sequence shown, in stages of 1/2 to 1 turn at a time. Torque nuts.

IMPORTANT: Do not allow the camshaft to turn during bracket installation and tightening.

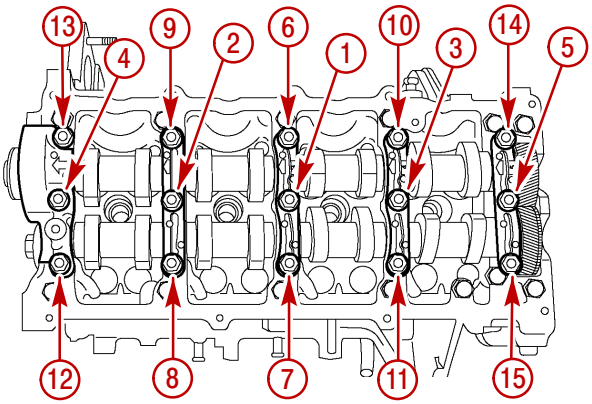

77284

Camshaft Torque Sequence

Description		Nm	lb-in.	lb-ft
Nut, Camshaft Bracket	M8x1.25	22		16
Nut, Camshaft Bracket	M10x1.25	43		32

5. Remove camshaft brackets and compare the width of the Plastigage against the scale printed on the Plastigage container.
6. If clearance between cam journal and bracket exceeds the limit, the camshaft and/or camshaft carrier assembly must be replaced.

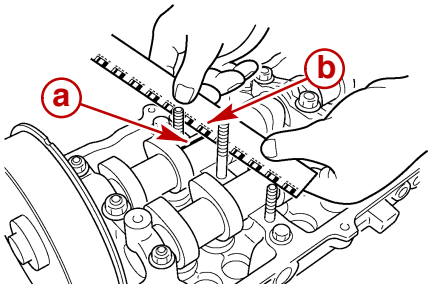

77210

a - Plastigage
b - Scale

Description		mm (in.)
Clearance between journal and bracket bearing surface	Production	0.040 - 0.082 (.0015 - 0.0032)
	Limit	0.110 (.0043)

Installation

⚠ CAUTION

To avoid severe engine damage the engine MUST BE set on cylinder number 1 COMPRESSION STROKE at TDC before proceeding.

1. Ensure that engine is on TDC of cylinder number 1 compression stroke.
2. Coat camshaft journals and lobes with clean engine oil.
3. Position camshafts in cam carrier. The mark on exhaust camshaft should be between the two marks on intake camshaft and approximately level with upper edge of camshaft carrier.

IMPORTANT: Ensure that engine is on TDC and timing marks are properly aligned.

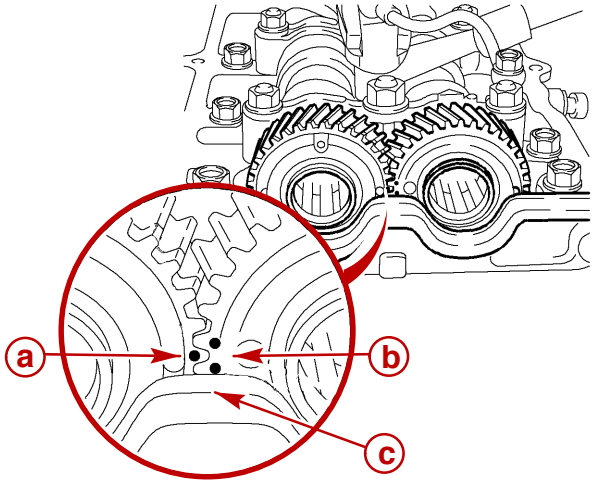

77254

a - Exhaust Camshaft Mark
b - Intake Camshaft Marks
c - Upper Edge Of Carrier

4. Apply sealant to sealing surfaces between carrier and front camshaft bracket.

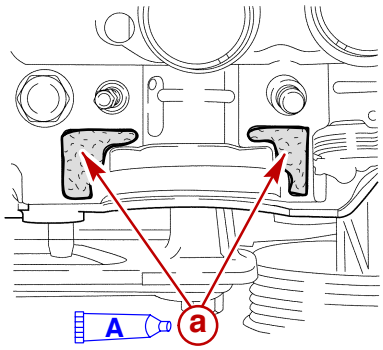

77255

a - Sealant

	Description	Where Used	Method of Use	Part Number
A	Loctite 5699	Between carrier and front camshaft bracket	Apply to contact surfaces as indicated	Obtain Locally

5. Install camshaft brackets 1 through 4. Tighten camshaft bracket nuts in a spiral pattern, as shown, in stages of 1/2 to 1 turn at a time, until hand tight.

NOTE: *Arrows on individual camshaft brackets point to front of engine.*

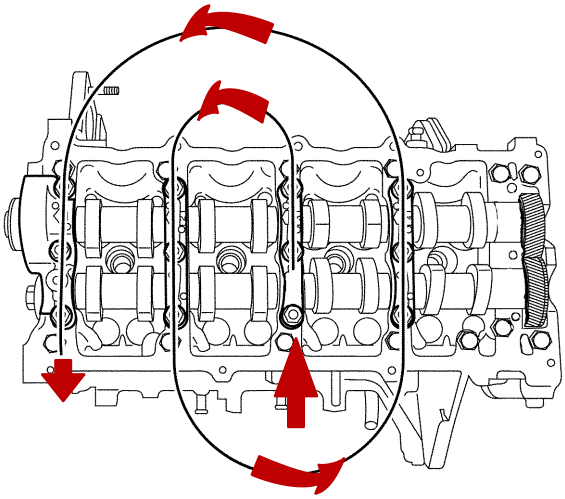

77167

6. Remove locking pin from exhaust camshaft gear.

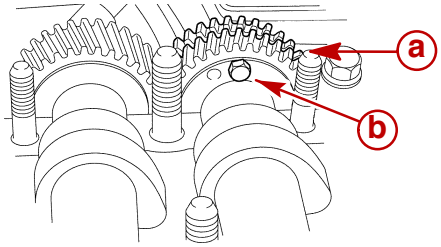

77166

a - Camshaft Gears
b - Locking Pin

7. Install camshaft bracket number 5. Torque M8 nuts and M10 nuts in sequence.

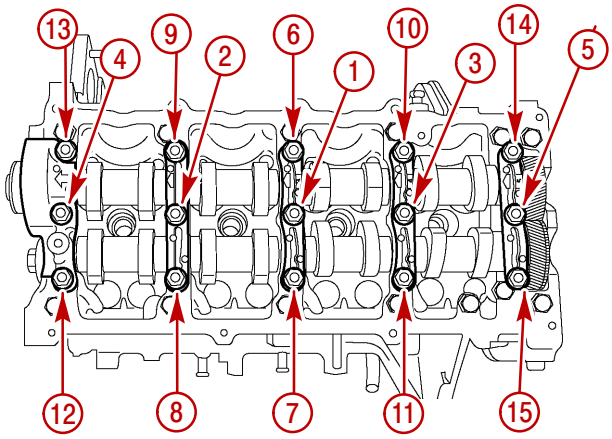

77284

Camshaft Bracket Torque Sequence

Description		Nm	lb-in.	lb-ft
Nut, Camshaft Bracket	M8 x 1.25	22		16
Nut, Camshaft Bracket	M10 x 1.25	43		32

8. Install a new camshaft seal in camshaft carrier using special tool.
9. Install camshaft pulley and camshaft pulley bolt.
10. Install TDC alignment bolt. Torque camshaft pulley bolt.

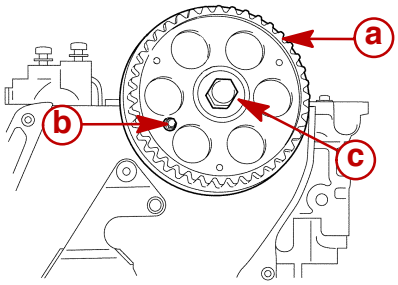

77163

a - Camshaft Pulley
b - TDC Alignment Bolt (M6)
c - Camshaft Pulley Bolt

Description	Nm	lb-in.	lb-ft
Bolt, Camshaft Pulley	64		47

11. Inspect and adjust valve clearance.
12. Install fuel injectors with new O-rings and new gaskets.
13. Install fuel return inner pipe using hollow bolts with new seal washers.
14. Install valve cover.
15. Install injection pipes and related fuel components.
16. Install timing belt.
17. Install timing belt covers.

Valve Clearance

The valve clearances are checked on a cold engine.

INSPECTION

1. Remove intake air duct.
2. Remove valve cover.
3. Remove fuel injectors.
4. Turn engine in direction of engine rotation to cylinder number 1 TDC.
5. Continue to turn crankshaft in direction of engine rotation until camshaft pairs **"a"** and **"b"** point upwards. These valves are then closed and can be checked.

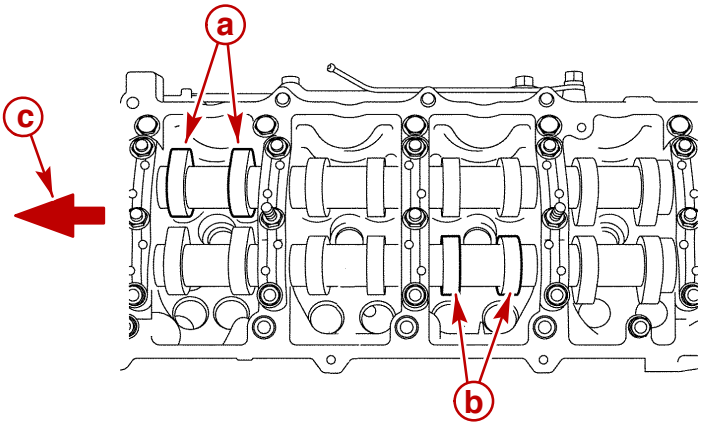

77124

a - Cylinder Number 1 Intake Camshaft Lobes
b - Cylinder Number 3 Exhaust Camshaft Lobes
c - Arrow Points To Front Of Engine

6. Check the valve clearance using a feeler gauge.

Description		mm (in.)
Valve Clearance	Intake	0.35 - 0.45 (0.014 - 0.018)
	Exhaust	0.45 - 0.55 (0.18 - 0.021)

ADJUSTMENT

⚠ CAUTION

Avoid possible severe engine damage. Ensure that the valves are NOT adjusted when the pistons are at Top Dead Center (TDC). The valves can strike the pistons if adjusted with the pistons at TDC.

1. Turn camshaft follower (cup with shim) until follower groove points out.
2. Press down camshaft follower using appropriate special tool.

NOTE: *Different tool versions for exhaust and intake valves.*

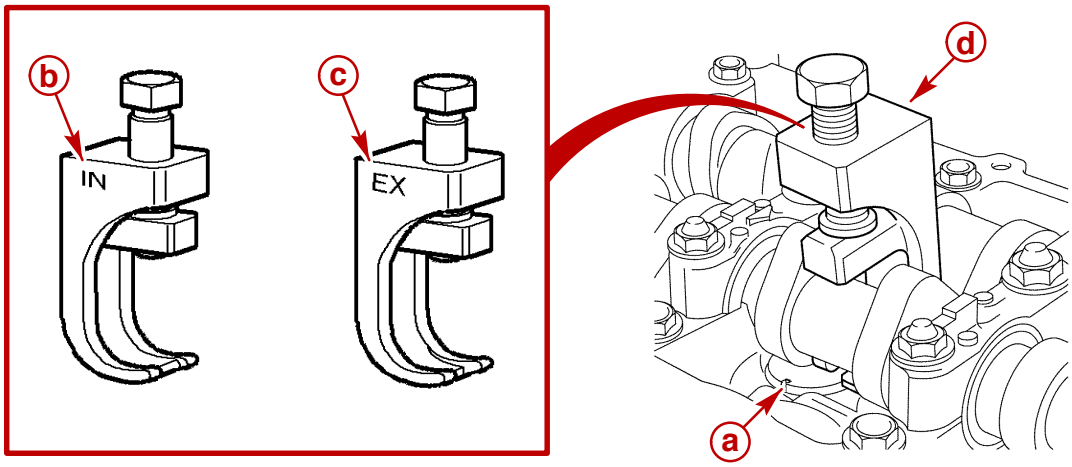

77124

a - Follower Groove - Pointing To Outside
b - Intake Tool
c - Exhaust Tool
d - Special Tool Installed

3. Lever shim out from camshaft follower groove using a small screwdriver or similar.
4. Remove shim.

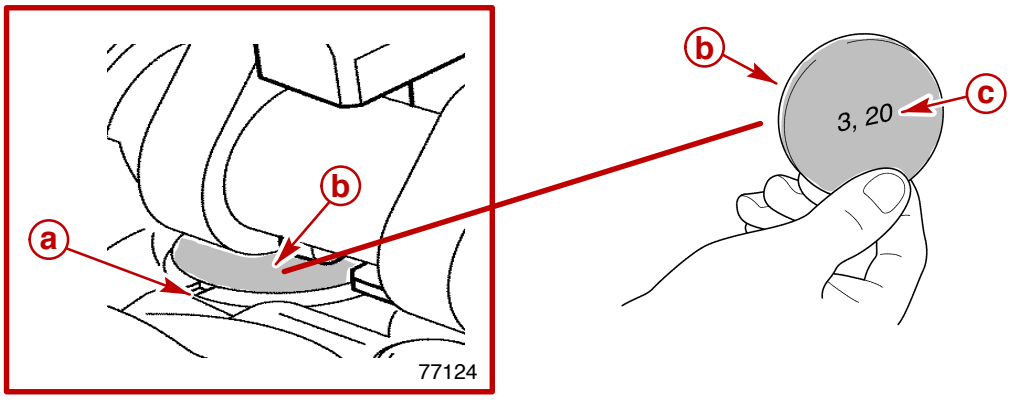

77125

a - Follower Groove
b - Shim
c - Thickness Inscription In mm

5. Calculate the thickness of the shim necessary to obtain specified clearance. To do so, add the current measured clearance A to the thickness of the current shim B. Then, subtract from that sum C the desired clearance D. The difference between them is the thickness of shim needed E.

Example for determination of shim thickness:

Current measured clearance	**A**	0.45 mm (0.018 in.)
Thickness of installed shim	**+ B**	3.15 mm (0.124 in.)
Sum of **A** + **B**	**= C**	3.60 mm (0.142 in.)
Sum of **A** + **B**	**C**	3.60 mm (0.142 in.)
Valve clearance desired	**– D**	0.40 mm (0.016 in.)
Thickness of shim needed	**= E**	3.20 mm (0.126 in.)

6. Coat needed shim with clean engine oil and insert in camshaft follower with thickness inscription facing downwards.
7. Complete adjustments as follows:
   a. Turn the crankshaft 180° in direction of engine rotation - check and adjust valve pair **"c"** and **"d"**.
   b. Turn the crankshaft 180° in direction of engine rotation - check and adjust valve pair **"e"** and **"f"**.
   c. Turn the crankshaft 180° in direction of engine rotation - check and adjust valve pair **"g"** and **"h"**.

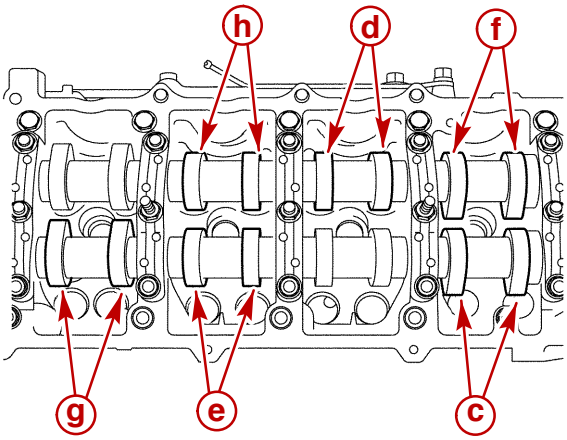

77126

Valve Pairs For Adjusting

8. Ensure proper valve clearance by re-checking all adjusted valves.

INSTALLATION

1. Install the fuel injectors.
2. Install the valve cover.
3. Install the injection pipes and related fuel components.
4. Install the intake air duct.

Camshaft Carrier

Exploded View

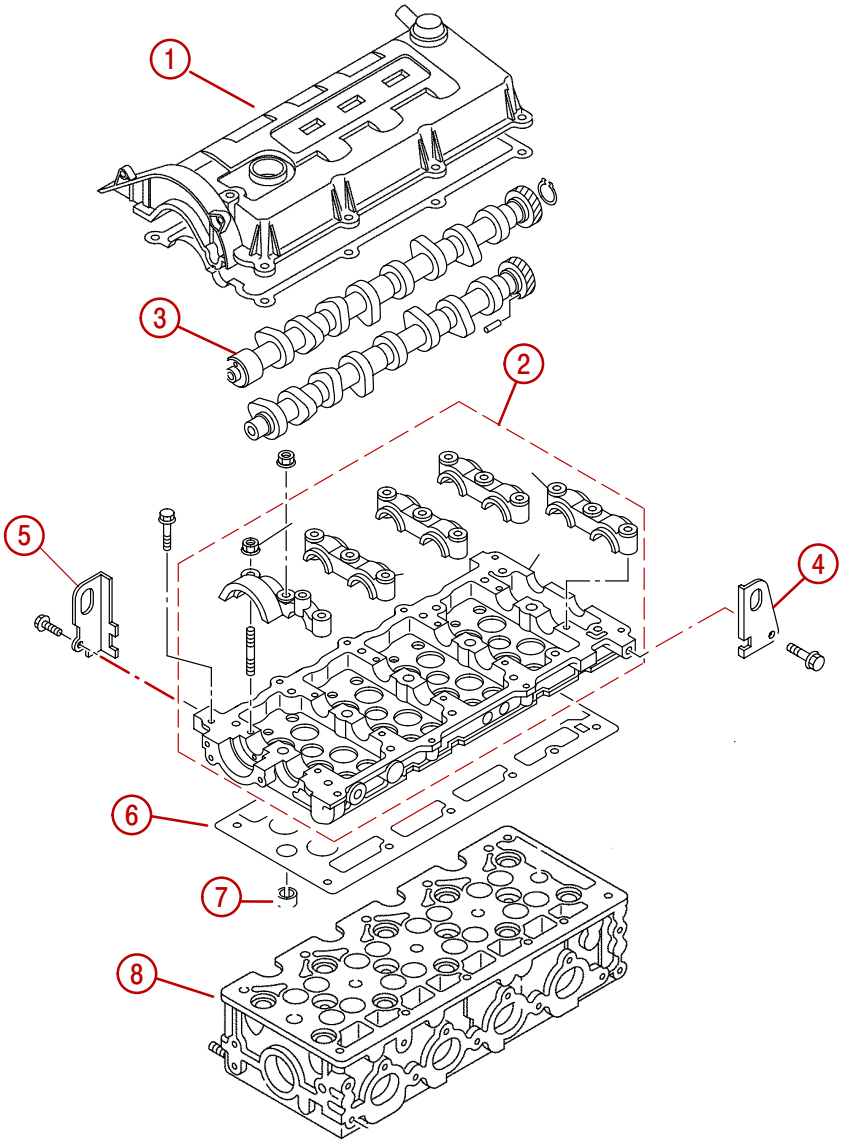

1 - Valve Cover
2 - Camshaft Carrier And Brackets
3 - Camshafts
4 - Rear Lifting Eye
5 - Front Lifting Eye
6 - Carrier Gasket
7 - Dowel
8 - Cylinder Head

Removal

1. Remove valve cover.
2. Remove fuel return inner pipe.
3. Remove injectors.
4. Remove timing covers and timing belt.

IMPORTANT: Ensure that engine is on TDC and timing marks are properly aligned.

5. Hold the camshaft pulley with TDC alignment bolt and remove camshaft pulley bolt.
6. Remove TDC alignment bolt and remove camshaft pulley.

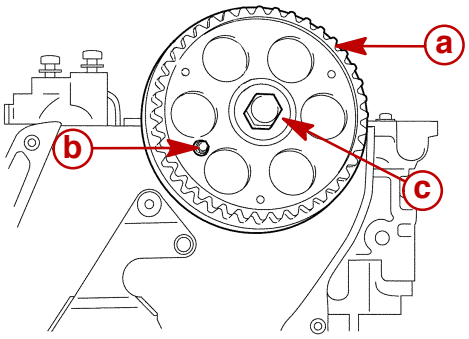

77163

a - Camshaft Pulley
b - TDC Alignment Bolt (M6)
c - Camshaft Pulley Bolt

7. Remove upper dust cover bolts in front.

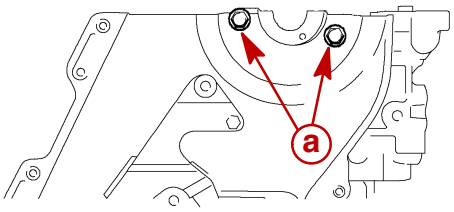

77164

a - Upper Dust Cover Bolts

8. Loosen all camshaft carrier bolts and nuts1/2 turn at a time in numbered sequence; then remove bolts and nuts.

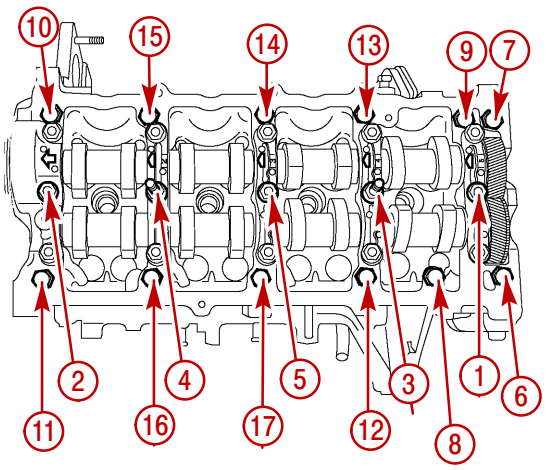

77165

Camshaft Carrier Bolt Removal Sequence

9. Remove camshaft carrier from cylinder head.
10. Discard old gasket.

Cleaning

1. Clean all sealing surfaces.
2. Remove sealant residue.

Inspection

1. Using a straight edge and feeler gauge, check the bottom surface of camshaft carrier for straightness.
2. Measure the four sides (**A, B, E, F**) and the two diagonals (**C, D**).

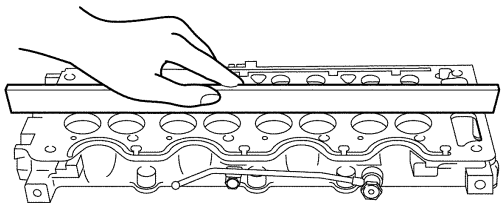

77187

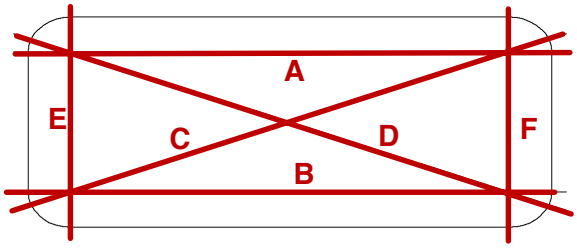

77188

Description		mm (in.)
Camshaft Carrier Lower Face Warp	Production	Less Than 0.05 (.002)
	Limit	0.05 (.0019)

3. Replace camshaft carrier if warp is greater than limit.
4. Measure height of camshaft carrier (sealing surface to sealing surface)

Description		mm (in.)
Camshaft Carrier Height	Production	29.62 (1.166)

5. Replace camshaft carrier if height is less than production specification.

Installation

1. Ensure that engine and camshafts are set on TDC and timing marks are properly aligned.
2. Install camshaft carrier on cylinder head using a new gasket.
3. Tighten all camshaft carrier bolts and nuts in steps of 1/2 to 1 turn in sequence. Torque bolts and nuts in sequence.

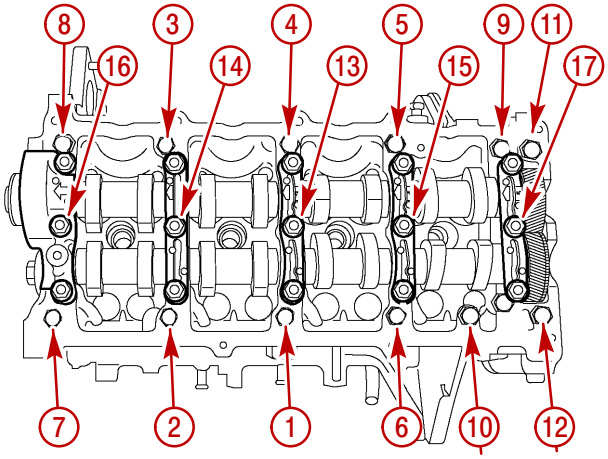

77284

Camshaft Carrier Torque Sequence

Description		Nm	lb-in.	lb-ft
Bolt, Camshaft Carrier	M8 x 1.25	22	–	16
Nut	M10 x 1.25	43		32

4. Install camshaft pulley.
5. Install TDC alignment bolt and torque camshaft pulley bolt.

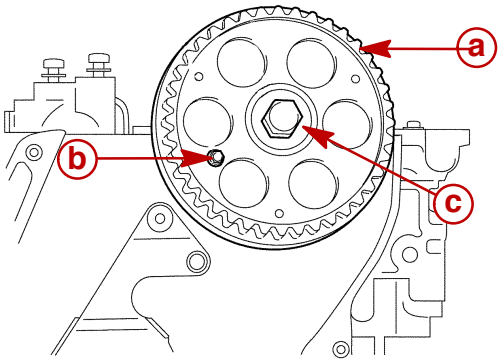

77163

a - Camshaft Pulley
b - TDC Alignment Bolt
c - Camshaft Pulley Bolt

Description	Nm	lb-in.	lb-ft
Bolt, Camshaft Pulley	64		47

6. Install timing belt and timing covers.
7. Install injectors and fuel return inner pipe.
8. Install valve cover.

Intake Manifold

Removal

1. Remove the air duct from intercooler to intake manifold.
2. Disconnect fuel supply hose. Plug hose to prevent fuel from leaking into boat
3. Disconnect fuel return hose.
4. Remove fuel filter and bracket.
5. Remove fuel injector pipes.
6. Remove fuel injection pump.
7. Remove air cleaner and PCV oil separator bracket.
8. Disconnect oil dipstick tube from intake manifold.
9. Disconnect fuel return pipe clip.
10. Remove the intake manifold.

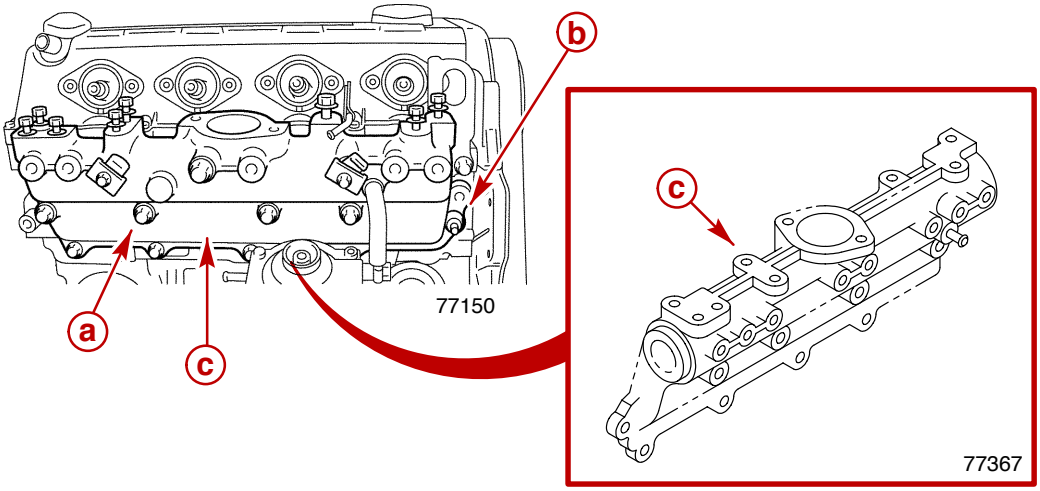

a - Bolt
b - Nut
c - Intake Manifold
d - Fuel Return Pipe Clip

11. Discard old gasket.

CLEAN

1. Clean with solvent and dry with compressed air.
2. Remove sealant residue and clean sealing surfaces.

INSPECTION

1. Inspect for cracks. Replace if cracked.
2. Ensure sealing surfaces are smooth and clean.

Installation

1. Install a new gasket and the intake manifold.
2. Tighten the fastening bolts and nuts in a cross pattern. Continuing the pattern, torque fasteners.

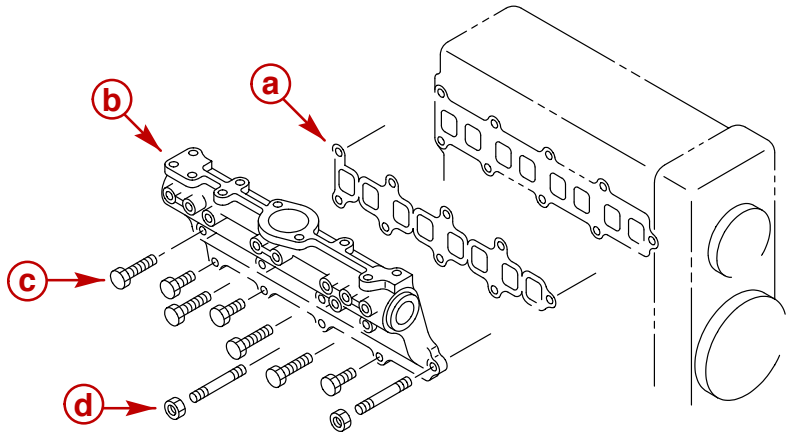

77291

a - Gasket
b - Intake Manifold
c - Bolts, M8 x 1.25
d - Nuts, M8 x 1.25

Description		Nm	lb-in.	lb-ft
Bolt / Nut, Intake Manifold	M8 x 1.25	25		18

3. Reconnect fuel return pipe clip to manifold. Torque bolt.

Description	Nm	lb-in.	lb-ft
Bolt, Fuel Return Pipe Clip	9.8	87	

4. Install fuel injection pump, fuel injector pipes and pressure hose. Refer to SECTION 5.

IMPORTANT: Ensure pressure hose from manifold fitting to boost compensator device on the injection pump is connected.

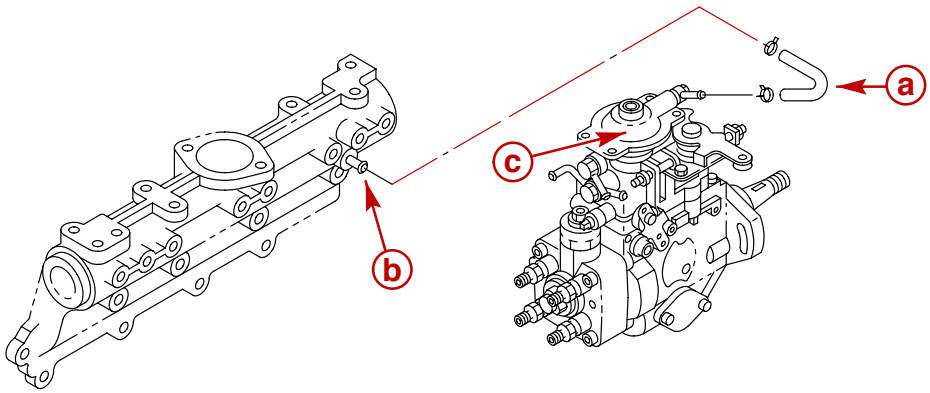

77367

a - Pressure Hose
b - Manifold Fitting
c - Boost Compensator

5. Install the intake manifold air duct with new gasket. Torque bolts.

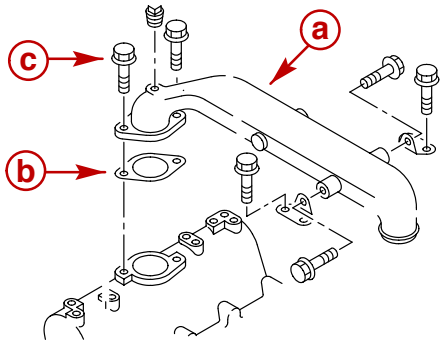

77368

a - Air Duct
b - Gasket
c - Bolt

Description		Nm	lb-in.	lb-ft
Bolt, Air Duct	M8 x 1.25	19	168	

6. Install fuel filter and bracket. Torque bolts.

Description		Nm	lb-in.	lb-ft
Bolt, Filter Bracket	M8 x 1.25	19	168	

7. Unplug and connect fuel supply hose to filter inlet fitting.
8. Connect fuel return hose to filter.
9. Connect oil dipstick tube bracket to intake manifold. Torque bolt.

Description		Nm	lb-in.	lb-ft
Bolt, Dipstick Tube Bracket	M8 x 1.25	19	168	

10. Install bracket with air cleaner and PCV oil separator. Connect hoses.

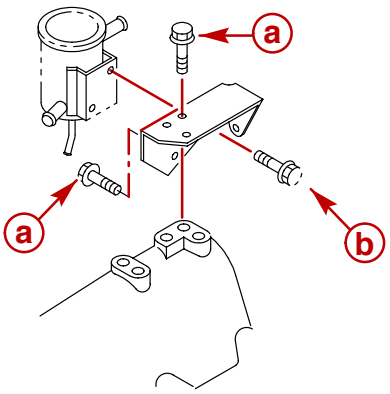

77299

a - Bolt, Bracket (5)
b - Bolt, PCV (2)

Description		Nm	lb-in.	lb-ft
Bolt, Bracket	M8 x 1.25	19	168	
Bolt, PCV	M8 x 1.25	19	168	

Cylinder Head

Exploded View

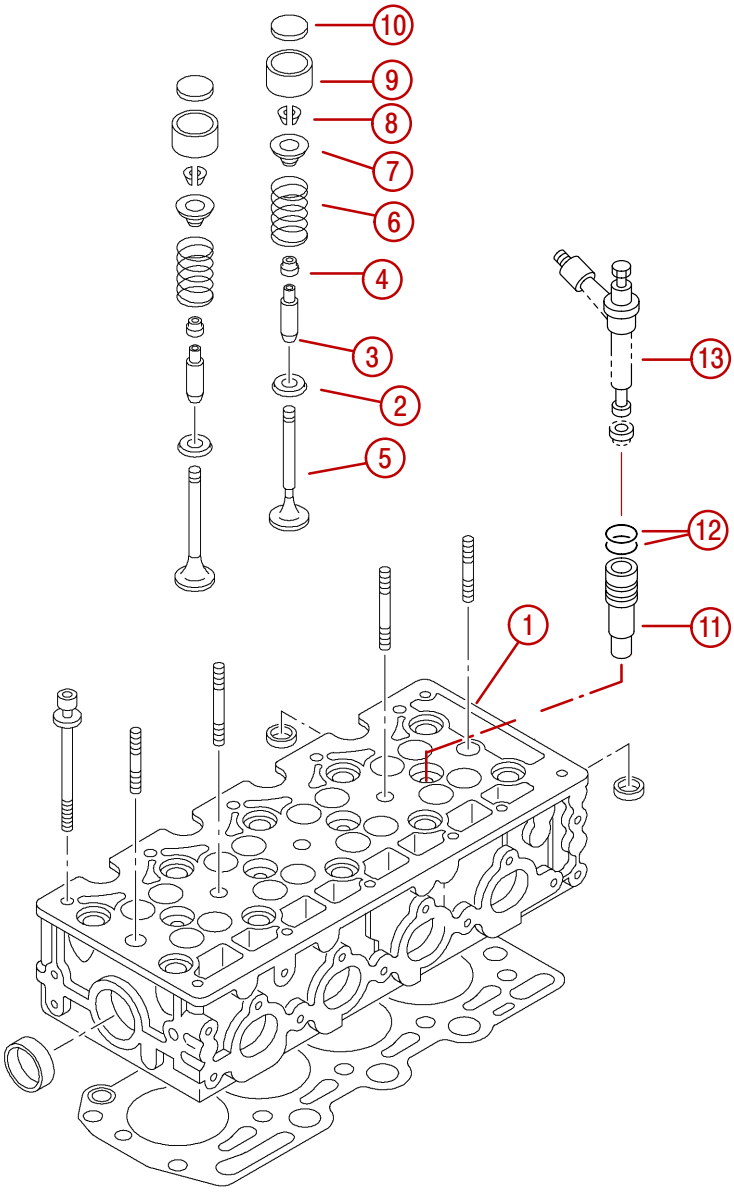

77236

1 - Cylinder Head
2 - Valve Spring Lower Seat
3 - Valve Guide
4 - Valve Stem Oil Seal
5 - Valve
6 - Valve Spring
7 - Valve Spring Retainer
8 - Split Collar
9 - Camshaft Follower
10 - Valve Shim
11 - Injector Sleeve
12 - Sleeve O-rings (2)
13 - Injector

Removal

IMPORTANT: To avoid distorting cylinder head, remove head only when engine is cold.

1. Remove valve cover.

IMPORTANT: Ensure that engine is on TDC and timing marks are properly aligned before removing timing belt.

2. Remove timing covers and timing belt.
3. Remove camshaft carrier.
4. Remove valve shims and camshaft followers.

IMPORTANT: The valve shims are used to adjust valve clearance. Be sure to keep each valve shim and its corresponding camshaft follower together. Mark each camshaft follower location. They must be reinstalled in their original locations.

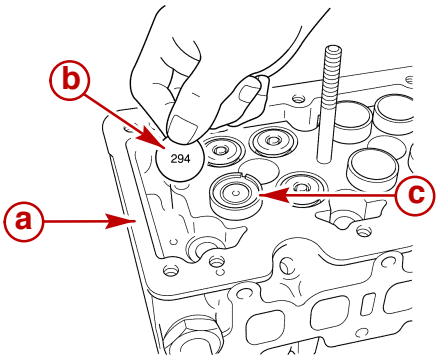

77241

a - Cylinder Head
b - Valve Shim
c - Camshaft Follower

5. Loosen cylinder head bolts in a spiral pattern, as shown, in stages of 1/2 to 1 turn until all are loose. Remove bolts.

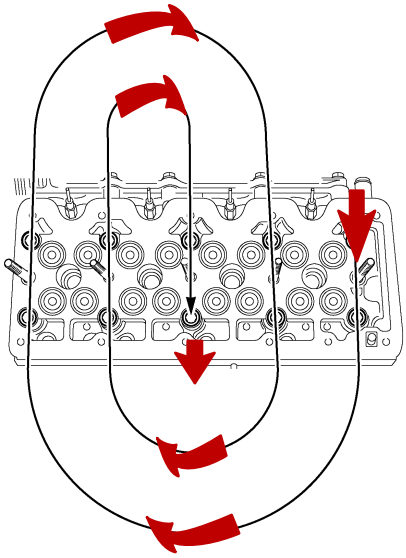

77120

6. Remove cylinder head.

IMPORTANT: On engines equipped with glow plugs, remove glow plugs, lay cylinder head on its side or support on wooden blocks to avoid damage to glow plugs.

Disassembly

1. Using valve spring compressor and adapter, carefully remove keepers, retainers, springs and spring seats. Place valves in numbered rack according to their position in the engine or label the parts in order for reassembly to the original location.

IMPORTANT: Mark location of all valve components; they must be reinstalled in their original locations.

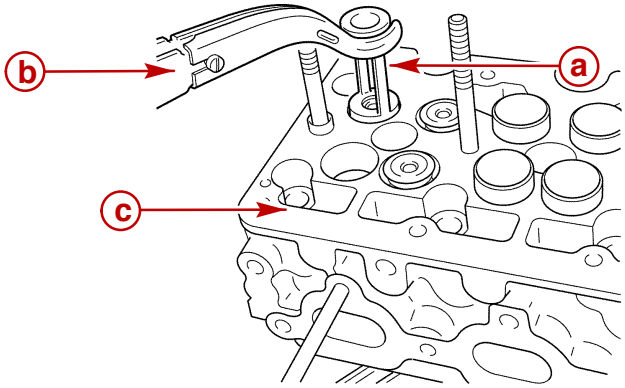

77174

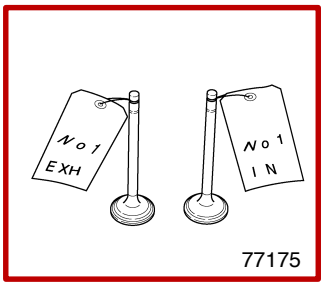

77175

a - Adapter
b - Valve Spring Compressor
c - Cylinder Head

2. Remove valve seals from valve guides.
3. Using the special remover tool and a hammer, drive the injector sleeves out of the cylinder head from the combustion chamber side.
4. Remove and discard the 2 O-rings.

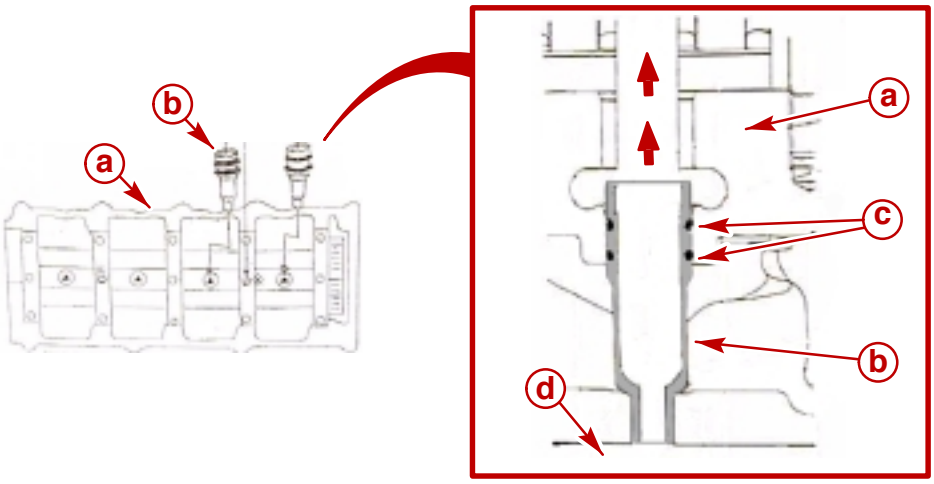

77800

Cross-Section Of Injector Sleeve In Cylinder Head

a - Cylinder Head
b - Injector Sleeve
c - O-ring
d - Combustion Chamber Side

Cleaning

1. Being careful not to damage the aluminum head, clean carbon deposits, residues and gasket material from combustion chambers and sealing surfaces.
2. Using wire wheel, remove carbon deposits from valves.
3. Wash head and components in cleaning solvent. Dry with compressed air.
4. Clean head bolt holes in engine block with a thread cleaning tool.

Inspection

GENERAL

1. Inspect glow plug seats for damage.
2. Inspect injector sleeves for leakage or damage.
3. Inspect injector sleeve bores in cylinder head for damage.
4. Inspect all gasket surfaces for deep grooves or pitting.
5. Inspect valve seats for cracks, excessive wear and looseness in counterbore.
6. Inspect valves for cracks, excessive wear and bent stems.
7. Inspect valve springs for discoloration due to excessive heat.
8. Inspect valve guides for cracks or chips. Inspect valve guide bores for seizure marks, carbon deposits or scoring. Inspect valve guide height.
9. Inspect valve spring keepers, retainers and spring seats for wear, distortion and cracks.
10. Inspect valve shims for pitting, cracking and discoloration due to excessive heat.
11. Inspect combustion chamber for melting of aluminum by faulty fuel injectors.

MEASURE VALVE GUIDE WEAR

1. Measure valve stem diameter.
2. Using a caliper calibrator or a telescoping gauge, measure the valve guide inside diameter

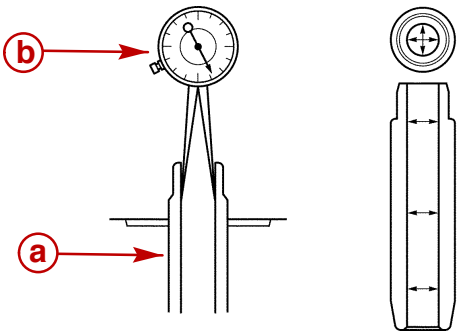

77192

a - Caliper Calibrator
b - Valve Guide

Description		mm (in.)
Intake Valve Guide Inside Diameter	Standard	0.023 - 0.050 (.001 - .002)
	Limit	0.080 (.003)
Exhaust Valve Guide Inside Diameter	Standard	0.028 - 0.056 (.001 - .002)
	Limit	0.095 (.004)

VALVES

1. Measure valve stem diameter in three places.
2. If the measured value is less than specified limit, the valve and valve guide must be replaced as a set.

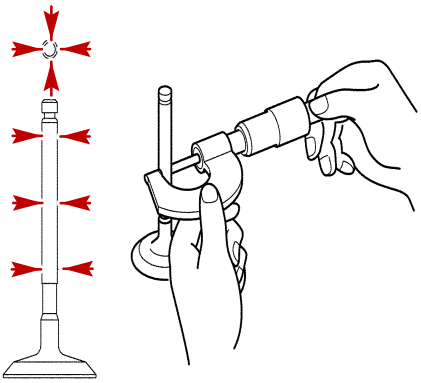

77196

Description		mm (in.)
Intake Valve Stem Diameter	Production	5.959 - 5.977 (.2346 - .2353)
	Limit	5.945 (.2341)
Exhaust Valve Stem Diameter	Production	5.954 - 5.972 (.2344 - .2351)
	Limit	5.940 (.2339)

3. Measure valve head margin.
4. If measured value is less than specified, the valve and the valve guide must be replaced as a set.

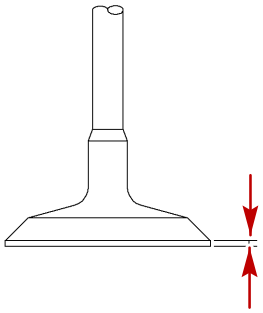

77197

Description		mm (in.)
Valve Margin (Production)	Intake	1.2 - 1.4 (0.047 - 0.055)
	Exhaust	
Margin (After Grinding)	Intake	1.0 (0.039)
	Exhaust	

VALVE SPRINGS

1. Use a vernier caliper to measure the valve spring free height. Replace spring if less than specified limit.

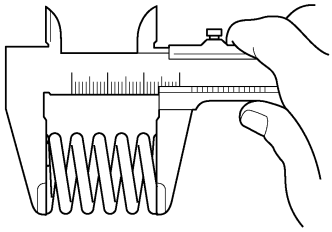

77198

Description		mm (in.)
Free Standing Height	Production	44.63 (1.76)
	Limit	44.13 (1.74)

2. If the measured value exceeds the specified limit, the valve spring must be replaced.

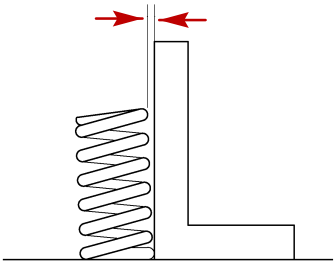

77199

Description		mm (in.)
Spring Inclination	Production	1.01 (0.040)
	Limit	

3. Use a spring tester to measure the valve spring tension. Replace spring if less than specified limit.

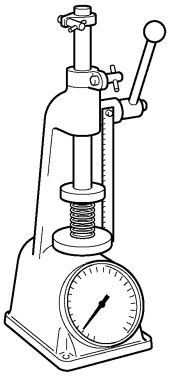

77200

Description		mm (in.)
Compressed Height at Pressure	Production	33.3 (1.31)
	Limit	at 160 N (36 lb)

Repair

VALVE GUIDE REPLACEMENT

1. Using a hammer and valve guide driver, drive the valve guide out of cylinder head from the combustion chamber side of cylinder head.

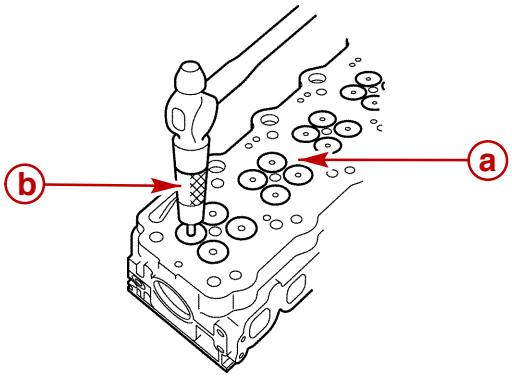

77176

a - Cylinder Head
b - Valve Guide Driver

2. Apply engine oil to outside of new valve guide and install on valve guide driver.

3. Using a hammer drive valve guide into position from top of cylinder head.

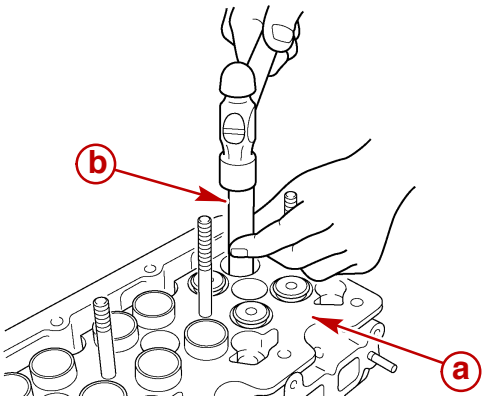

77194

a - Top Of Cylinder Head
b - Valve Guide Driver

4. Measure the height of valve guide from upper face of cylinder head.

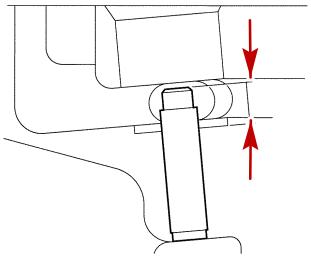

77195

Description		mm (in.)
Upper End Height	Intake	11.7 (.4606)
	Exhaust	

IMPORTANT: If the valve guide has been removed, both the valve and the valve guide must be replaced as a set.

Reassembly

1. Install O-rings on injector sleeves. Apply a light coat of engine oil to O-rings and cylinder head injector sleeve bores.

⚠ CAUTION

Avoid severe engine damage. Injector sleeve O-rings form a seal between the combustion chamber, coolant passages and lubricating oil in the cylinder head. Severe engine damage could result if the O-rings are damaged during installation. DO NOT damage the O-rings during installation.

2. Using special installer tool and a hammer, carefully tap injector sleeves into bores in cylinder head.
3. Verify all sleeves are fully seated in cylinder head after installation.

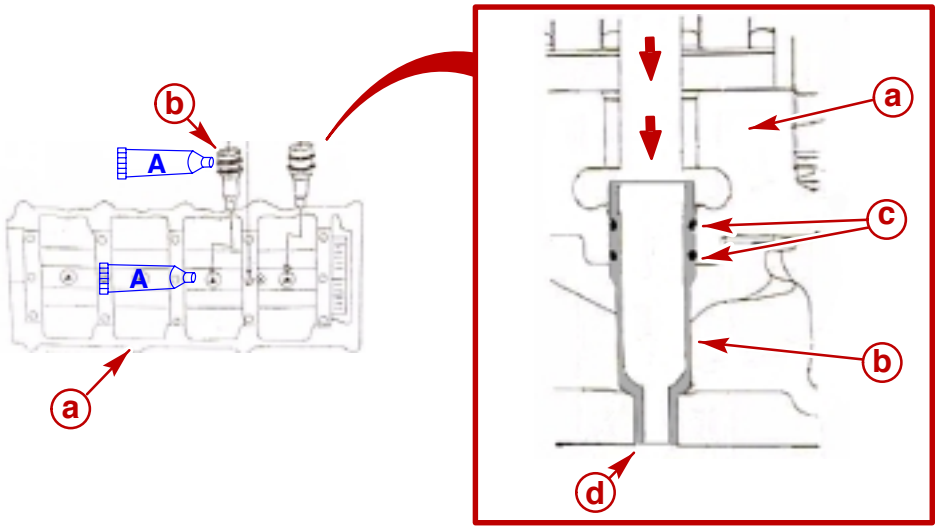

Cross-Section Of Injector Sleeve In Cylinder Head

a - Cylinder Head
b - Injector Sleeve
c - O-ring
d - Fully Seated

Description		Where Used	Method of Use	Part Number
A	Engine Oil	Injector sleeve bore and O-rings	Coat surfaces	Obtain Locally

4. Install the valve spring lower seat.

5. Apply a coat of engine oil to valve seal inner surface. Install valve seal using valve seal installer.

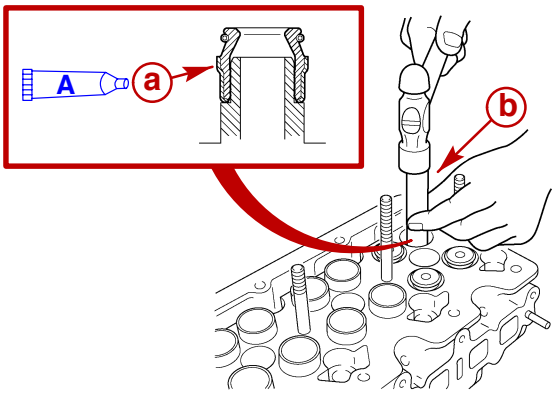

77237

a - Valve Seal
b - Valve Seal Installer

Description		Where Used	Method of Use	Part Number
A	Engine Oil	Valve seal	Coat surfaces	Obtain Locally

IMPORTANT: Ensure that all valve components are installed in their original locations.

6. Apply a coat of engine oil to valve stem and install valve in cylinder head.

Description	Where Used	Method of Use	Part Number
Engine Oil	Valve stem	Coat surfaces	Obtain Locally

7. Turn the cylinder head up to install the valve springs.

IMPORTANT: Ensure that valves stay in cylinder head when turning the head.

8. Install valve springs with the fine pitched end (the end with more windings) facing the cylinder head (down).

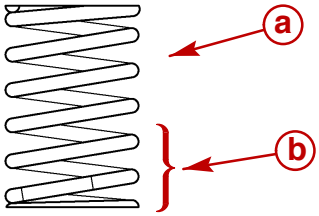

77238

a - Valve Spring
b - Fine Pitch

9. Install valve spring retainer and compress spring using valve spring compressor and adapter.
10. Install split collar on valve stem and release valve spring compressor. Ensure that keepers seat properly in groove of valve stem.

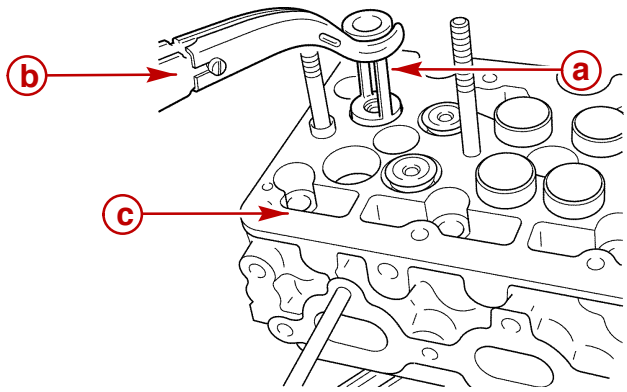

77174

a - Adaptor
b - Valve Spring Compressor
c - Cylinder Head

11. Set split collar by tapping valve stem with a soft (plastic) hammer.
12. Apply engine oil to camshaft follower and valve shim.
13. Install camshaft follower and shim.

IMPORTANT: Ensure that cam followers and valve shims are installed in their original locations.

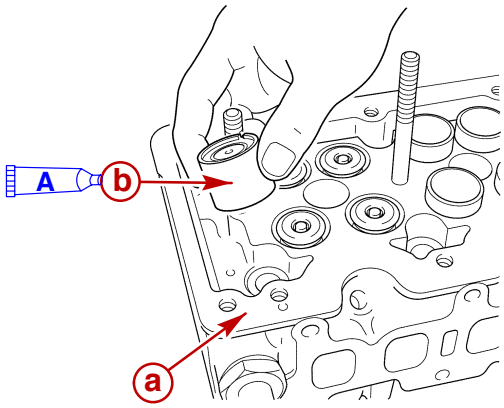

77172

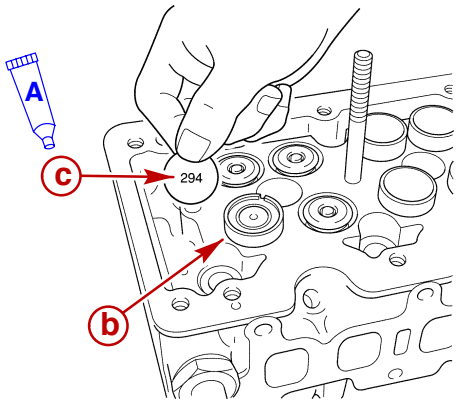

77241

a - Cylinder Head
b - Camshaft Follower
c - Valve Shim

	Description	Where Used	Method of Use	Part Number
A	Engine Oil	Camshaft follower and shim	Coat surfaces	Obtain Locally

Installation

⚠ CAUTION

Head gasket thickness is very important on diesel engines. If head gaskets are too thin, the pistons will hit the valves or heads, causing severe damage. If head gaskets are too thick, cylinder compression may be low.

When cylinder heads are removed for service but pistons and cylinder liners are not disturbed, use the same thickness gaskets that were removed. Refer to Head Gasket Identification.

Refer to Determine Head Gasket Thickness during a complete engine rebuild or when pistons are being replaced.

DETERMINE HEAD GASKET THICKNESS

1. Carefully remove carbon deposits from piston top surface and gasket residue from cylinder block surface.
2. Using a dial indicator measure piston protrusion at two points.
3. Measure piston protrusion for each cylinder.
4. Note highest measured value. This will determine cylinder head gasket thickness.

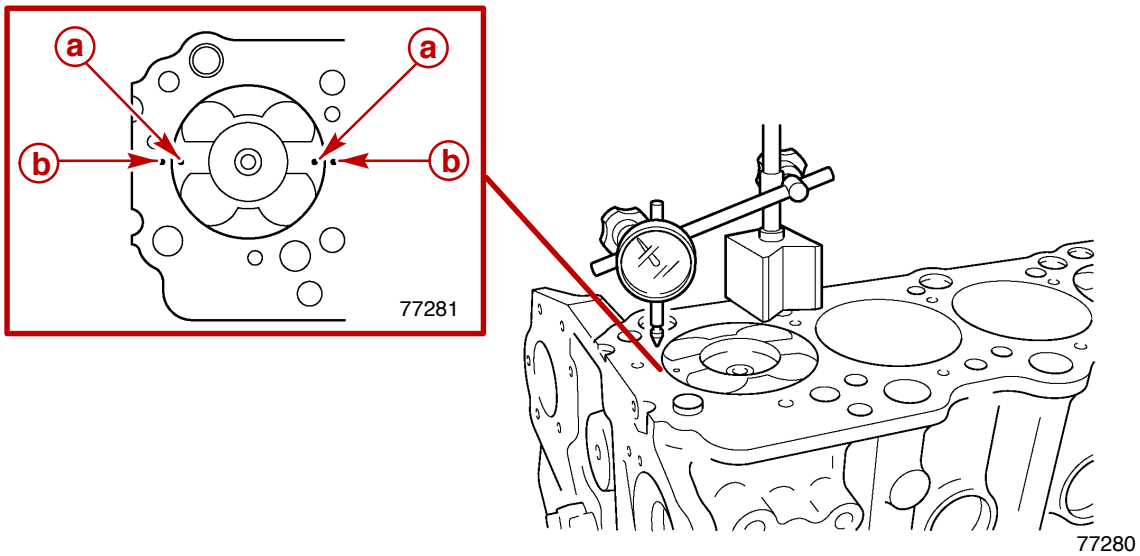

a - Piston Surface
b - Cylinder Block Surface

Description	mm (in.)
Piston Protrusion Range	0.58 - 0.78 (0.023 - 0.031)

5. Piston protrusion must be within the range shown.

NOTE: If piston protrusion is beyond the above range, engine should be inspected for worn or damaged components or improper assembly of components.

HEAD GASKET IDENTIFICATION

Select a cylinder head gasket of appropriate thickness (or grade) from chart below.

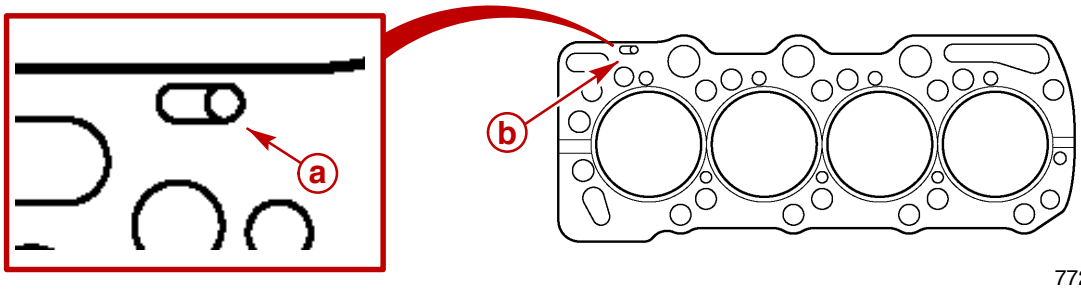

77282

a - Grade Mark
b - Grade Mark Location

Grade	Grade Mark	Highest Piston Projection mm (in.)
A		0.58 - 0.64 (0.023 - 0.025)
B		0.65 - 0.71 (0.026 - 0.028)
C		0.72 - 0.78 (0.028 - 0.031)

CYLINDER HEAD

IMPORTANT: Head gaskets must be installed DRY. DO NOT use any sealer on gasket.

1. Install head gasket on cylinder block.
2. Align the cylinder block dowels and the cylinder head dowel holes.
3. Carefully set the cylinder head onto cylinder block.

⚠ CAUTION

Avoid engine damage. Cylinder head bolts may be installed two times, and then must be replaced with new bolts. Replace bolts if uncertain of number of times installed.

4. Apply engine oil to threads of cylinder head bolt and washer faces.

Description	Where Used	Method of Use	Part Number
Engine Oil	Cylinder head bolt and washer	Coat threads and surfaces	Obtain Locally

IMPORTANT: Follow torque sequence in each step.

5. Hand tighten the cylinder head bolts.
6. Torque the cylinder head bolts.

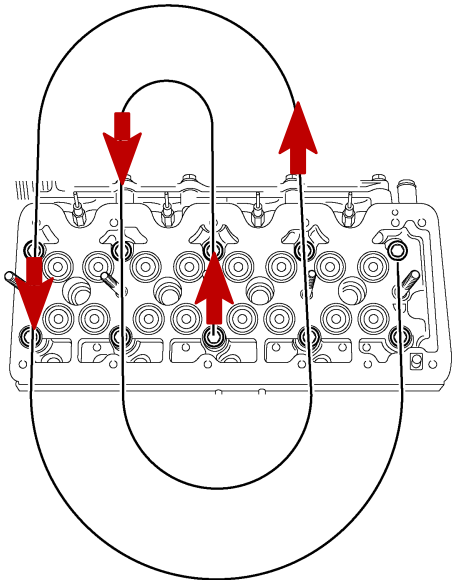

77120

Torque Sequence Diagram

Description		Nm	lb-in.	lb-ft
Bolt, Cylinder Head	M8 x 1.25			
	First Pass	39		29
	Second Pass	60°		
	Third Pass	60°		

7. Install camshaft tappets and valve shims.
8. Install camshaft carrier.
9. Install valve cover.
10. Install fuel injectors and fuel pipes.
11. Install timing belt and timing covers.

Connecting Rod / Piston Assembly

Exploded View

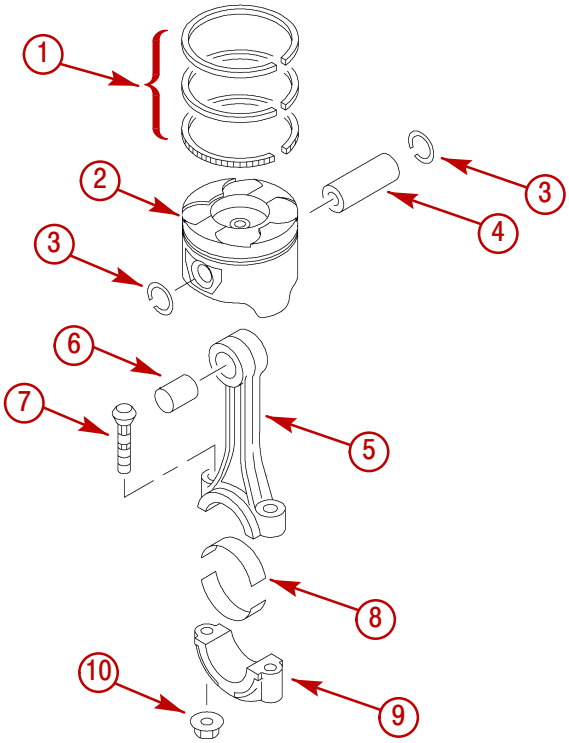

77177

1 - Piston Rings
2 - Piston
3 - Snap Ring
4 - Piston Pin
5 - Connecting Rod
6 - Connecting Rod Bushing
7 - Connecting Rod Bolt
8 - Connecting Rod Bearings
9 - Connecting Rod Cap
10 - Nut

Removal

1. Remove cylinder head.
2. Remove upper and lower oil pan.
3. Remove oil pickup assembly and oil baffle plate.

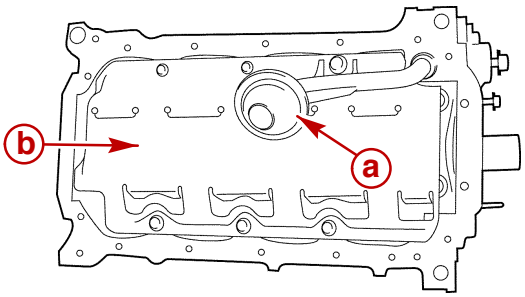

77145

a - Pickup Assembly
b - Baffle Plate

4. Using a reamer remove any ridge or combustion deposits from top of cylinder bore.
5. Turn crankshaft to gain access to connecting rod bolts.

IMPORTANT: Mark the location of each connecting rod assembly to ensure that they are reassembled in the same location.

IMPORTANT: The mating surfaces of the connecting rods and the connecting rod bearing caps form an individual fit and as a result must not be interchanged or damaged under any circumstances. To avoid damage, do not lay connecting rods or connecting rod bearing caps on their mating surfaces.

6. Mark and remove connecting rod bearing cap.

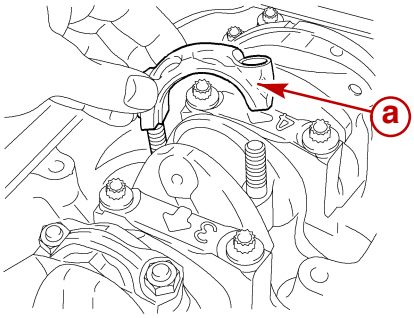

77179

a - Bearing Cap

IMPORTANT: Connecting rod bolt threads can damage crankshaft journal and cylinder bore.

7. Cover connecting rod bolt threads with protective caps.
8. Push piston and connecting rod out of cylinder.

Disassembly

1. Clamp connecting rod in a soft jawed vise as shown.

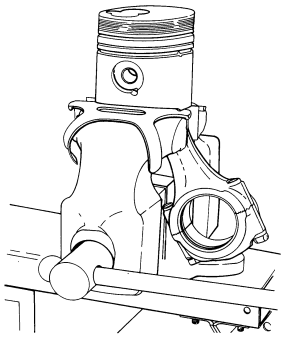

70290

2. Use piston ring expander tool to remove the two compression rings.

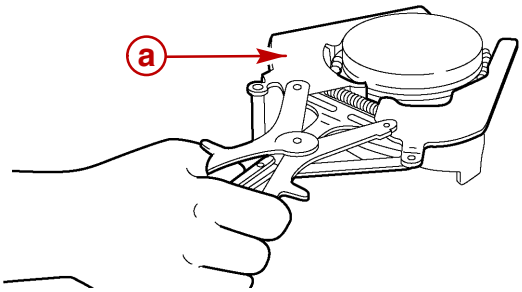

77182

a - Piston Ring Expander Tool

3. Using same tool, remove lower (oil control) rings and expanders.

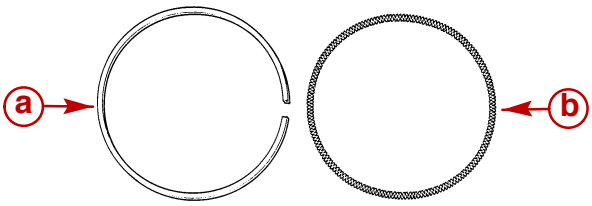

70291

a - Oil Control Ring
b - Expander

4. Note installation position of connecting rod relative to piston. Piston mark (raised dots) is on the same side as the mark on the connecting rod.

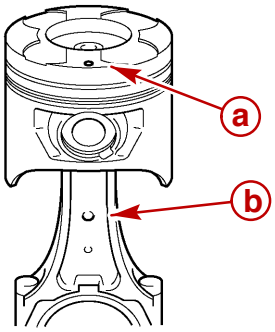

77183

a - Piston Mark
b - Connecting Rod Mark

5. Remove snap ring from piston using suitable tool. Push piston pin from piston and connecting rod by hand.

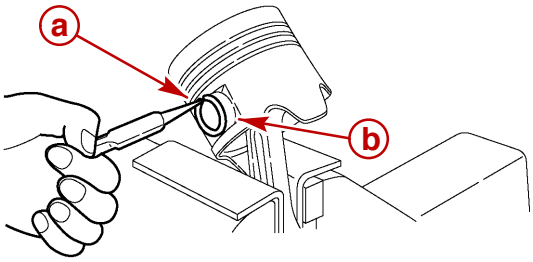

77184

a - Snap Ring
b - Piston Pin

Cleaning

1. Clean all parts with solvent.
2. Clean oil passages.
3. Dry parts with compressed air.
4. Clean varnish from piston skirts and pins with a suitable cleaning solvent. DO NOT wire brush any part of piston.
5. Clean piston ring grooves. Ensure that oil ring holes are clean.

Inspection

CONNECTING ROD

1. Check for twisted or bent rods and inspect for nicks or cracks. Replace damaged connecting rods.
2. Use a caliper calibrator and a micrometer to measure the piston pin and connecting rod bushing clearance. Replace the piston pin and/or the connecting rod bushing if clearance exceeds specified limits.

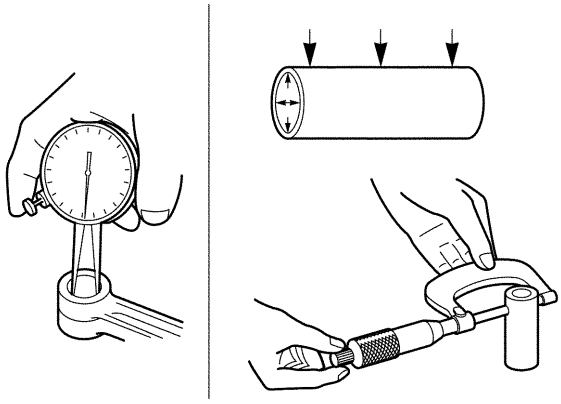

77231

Description		mm (in.)
Bushing To Piston Pin Clearance	Standard	0.008 - 0.020 (0.0003 - 0.0007)
	Limit	0.050 (0.0020)

3. Use a connecting rod aligner to measure distortion and parallelism between connecting rod crankshaft pin bore and bushing bore. Replace rod if either value exceeds specified limits.

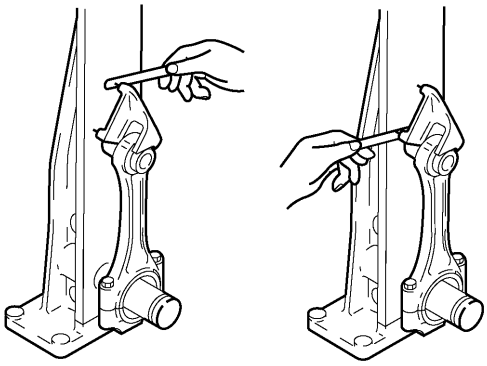

77234

Connecting Rod Alignment Per Length of 100 mm (4 in.)

Description		mm (in.)
Connecting Rod Distortion Per Length of 100 mm	Standard	0.05 - (0.002)
	Limit	0.10 (0.004)
Connecting Rod Parallelism Per Length of 100 mm	Standard	0.075 (0.003)
	Limit	Not Available At Time Of Printing

PISTON

1. Inspect piston for cracked ring lands, skirts or pin bosses, wavy or worn ring lands, scuffed or damaged skirts and eroded areas at top of piston. Replace pistons that are damaged or show signs of excessive wear.
2. Inspect grooves for nicks or burrs that might cause rings to hang up.
3. Insert edge of rings into respective piston ring groove and roll ring entirely around the groove to make sure that ring is free. If binding occurs at any point, determine cause. If caused by ring groove, remove by dressing with a fine cut file. Do not remove excess material. (Verify with feeler gauge and compare to specifications.)
4. Measure piston outside diameter and determine piston service grade.

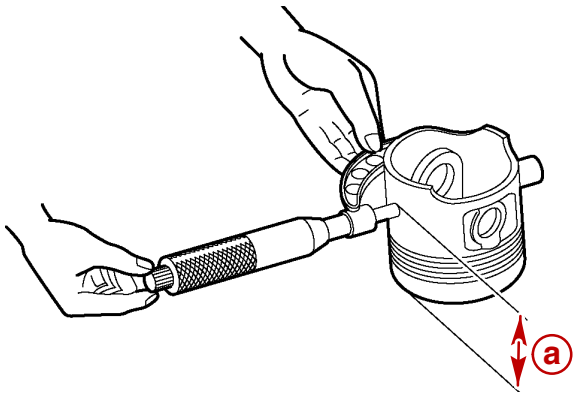

77205

Piston Outside Diameter

a - Piston Measuring Point - 57 mm (2 - 1/4 in.)

Description		mm (in.)
Piston Outside Diameter	Grade A	78.930 - 78.939 (3.1075 - 3.1078)
	Grade B	78.940 - 78.949 (3.1079 - 3.1082)
	Grade C	78.950 - 78.959 (3.1083 - 3.1086)

5. Using a feeler gauge, measure the clearance between the piston ring and the piston ring groove at several points around the piston. Replace piston if ring groove exceeds the specified limit.

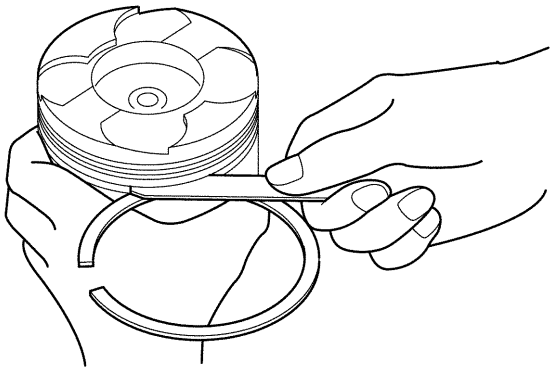

77228

Piston Ring and Piston Ring Groove Clearance

Description		mm (in.)
Ring to Groove Clearance	1st Compression	.090 - .122 (0.0035 - 0.0048)
	2nd Compression	.070 - .110 (0.0027 - 0.0043)
	Oil Control	.025 - .065 (0.0010 - 0.0026)
	Limit–All Rings	0.15 (0.006)

6. Use a micrometer to measure the piston pin outside diameter at several points. Replace pin if measured value is less than specified limit.

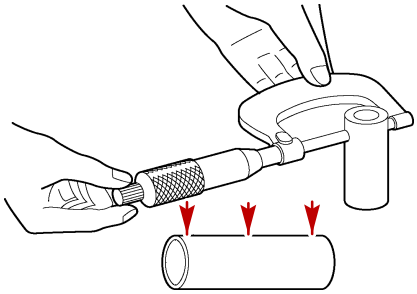

77229

Piston Pin Diameter

Description		mm (in.)
Piston Pin Outer Diameter	Standard	26.995 - 27.000 (1.0627 - 1.0629)
	Limit	26.985 (1.0624)

PISTON PIN AND CLEARANCE

1. Use an inside dial indicator to measure the diameter of piston pin hole.
2. Replace piston, if pin hole measurement is greater than specified.

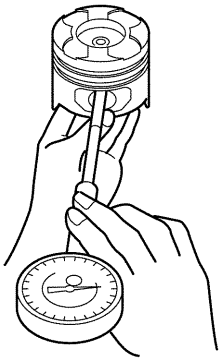

77230

Piston Pin Hole

Description		mm (in.)
Pin Hole Inner Diameter	Production	27.004 - 27.009 (1.0631 - 1.0633)

3. Subtract piston pin outer diameter (measured previously) from piston pin hole diameter. Replace piston and pin if measured clearance is more than specified limit.

Description		mm (in.)
Clearance	Production	.004 - .014 (0.0001 - 0.0005)
	Limit	0.04 (0.0016)

NOTE: *Calculate clearance using a new piston pin if measurement is greater than limit with existing piston pin. Replace as necessary.*

PISTON RING GAP

1. Insert the piston ring horizontally into the cylinder bore.
2. Using a piston inserted upside down, push the piston ring into the cylinder bore until it reaches measuring point "**a**" and measuring point "**b**". Cylinder bore diameter is smallest at these two points.

NOTE: Ensure that piston ring is not slanted to one side or the other. It must be perfectly horizontal.

3. Using a feeler gauge, measure the piston ring gap. Replace ring if gap exceeds specified limits.

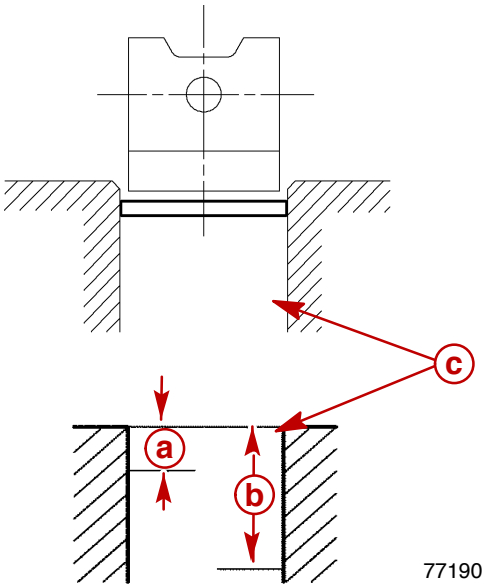

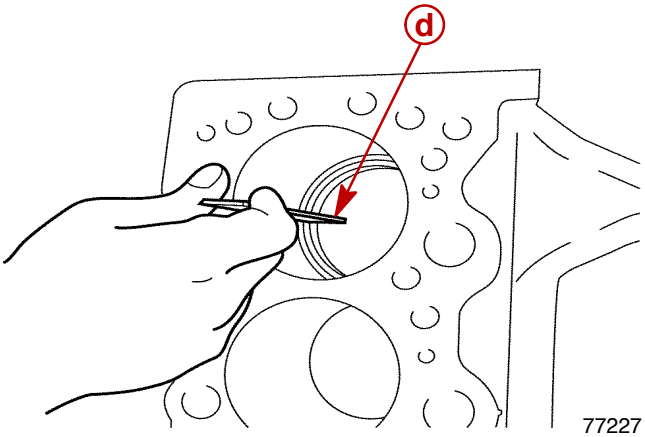

Piston Ring Gap

a - Measurement Point
b - Measurement Point
c - Cylinder Bore
d - Feeler Gauge

Description		mm (in.)
End Gap	1st Compression	.250 - .350 (0.010 - 0.014)
	2nd Compression	.200 - .300 (0.008 - 0.012)
	Oil Control	.200 - .400 (0.008 - 0.016)
	Limit - All Rings	0.8 (0.031)

Installation

CONNECTING ROD BUSHING

1. Using the connecting rod bushing tool, press a new connecting rod bushing into the connecting rod.

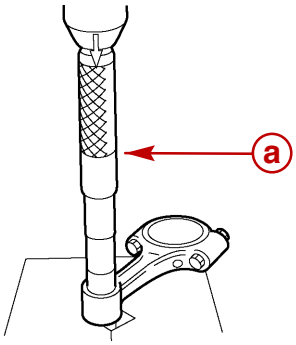

77232

a - Connecting Rod Bushing Tool

2. Ream new bushing to proper diameter.

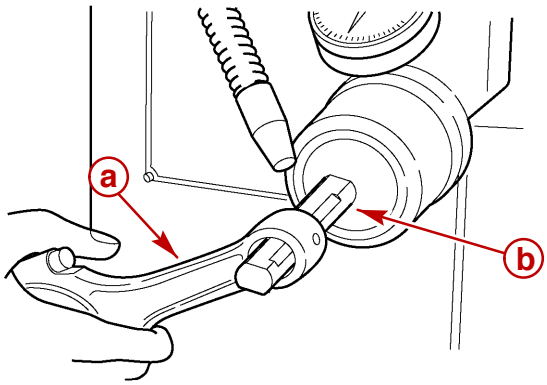

77233

Connecting Rod Bushing Reaming

a - Connecting Rod
b - Reamer

Description	mm (in.)
Connecting Rod Bushing Inner Diameter	27.008 - 27.015 (1.0633 - 1.0635)

CONNECTING ROD AND PISTON ASSEMBLY

1. Clamp connecting rod in a soft jawed vise. Take care not to damage the connecting rod.
2. Install one piston pin snap ring to the piston.

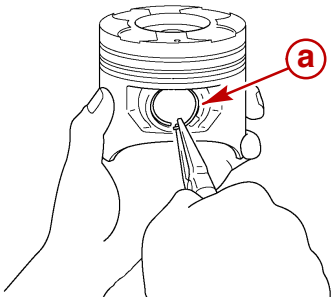

77243

a - Piston Pin Snap Ring

3. Install piston on connecting rod.

IMPORTANT: Ensure that the mark indicating piston front is on the same side as the mark (raised dots) on the connecting rod.

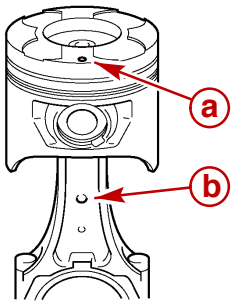

77183

a - Piston Mark
b - Connecting Rod Mark

4. Apply a coat of engine oil to piston pin and piston pin hole.
5. Install piston pin into piston and connecting rod until it makes slight contact with the first snap ring.

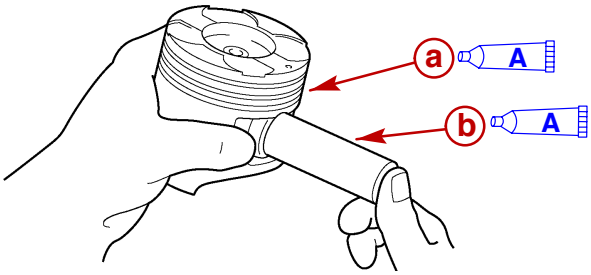

77245

a - Piston
b - Piston Pin

Description		Where Used	Method of Use	Part Number
A	Engine Oil	Piston and pin	Coat surfaces	Obtain Locally

6. Install second piston pin snap ring into piston snap ring groove.

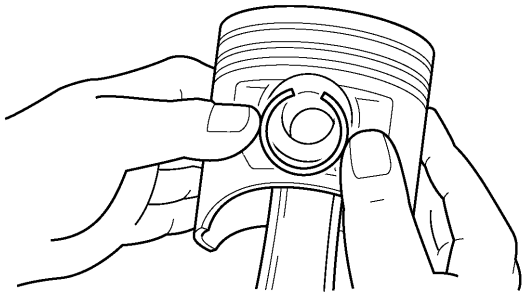

77246

7. Check that connecting rod moves smoothly on piston pin.

PISTON RINGS

1. Apply engine oil to piston ring surfaces and piston.

IMPORTANT: Use a piston ring expander to avoid damaging the piston rings.

2. Insert expander coil into oil ring groove so that there is no gap on either side of expander coil.
3. Install oil ring.

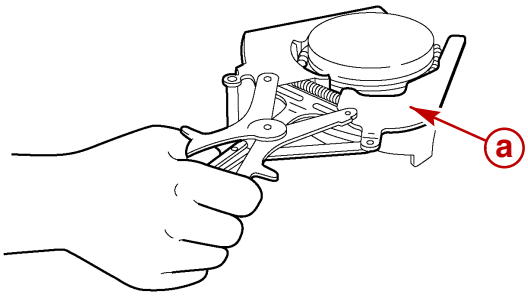

77182

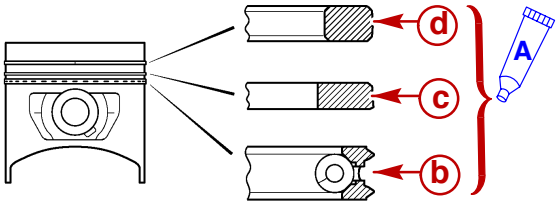

77248

a - Piston Ring Expander
b - Oil Ring (Coil Expander Type)
c - Second Compression Ring
d - First Compression Ring

	Description	Where Used	Method of Use	Part Number
A	Engine Oil	Rings and piston	Coat surfaces	Obtain Locally

4. Install compression rings with stamped side facing up.

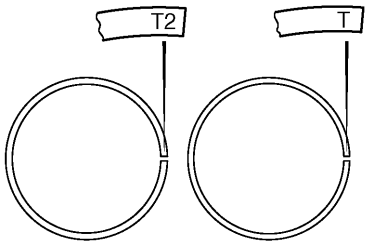

77249

5. Check that the piston rings rotate smoothly in the piston ring grooves.
6. Align piston ring gaps as shown.

NOTE: *The gap of each piston ring must be offset by 120°.*

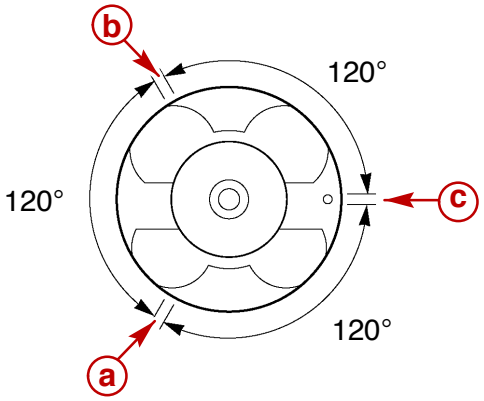

77250

a - Oil Ring Gap
b - Second Ring Gap
c - First Ring Gap

Crankshaft, Main Bearings And Cylinder Block

Exploded View

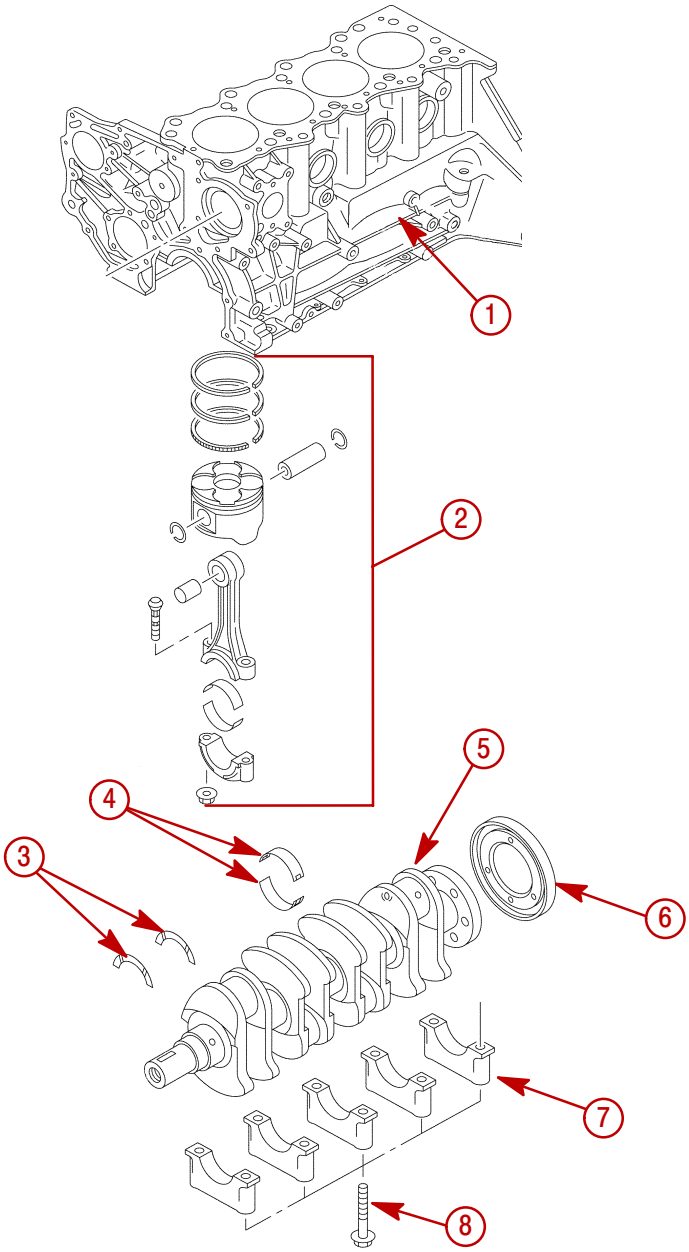

77304

1 - Cylinder Block
2 - Connecting Rod / Piston Assembly
3 - Thrust Bearing (Second Main Bearing)
4 - Main Bearing
5 - Crankshaft
6 - Rotor
7 - Main Bearing Caps
8 - Main Bearing Bolt

Removal

1. Remove cylinder head.
2. Remove oil pump assembly.
3. Remove oil pan, oil strainer and oil baffle plate.
4. Remove flywheel housing, coupler flywheel and rear main seal retainer.
5. Remove connecting rod / piston assemblies.
6. Measure crankshaft end play before removing. The thrust bearings will need to be replaced during reassembly if end play exceeds specified limit.

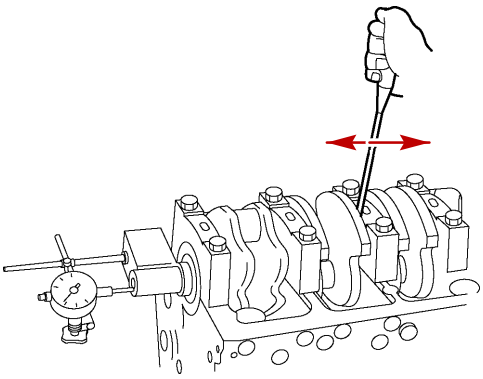

77212

Crankshaft End Play

Description		mm (in.)
Crankshaft End Play (Thrust Clearance)	Production	0.05 - 0.15 (0.002 - 0.006)
	Limit	0.20 (0.008)

7. Loosen main bearing bolts in sequence shown below and remove.

IMPORTANT: Main bearing caps have arrows pointing toward front of engine and are numbered 1 - 5 beginning at front. They must be reassembled in their original positions.

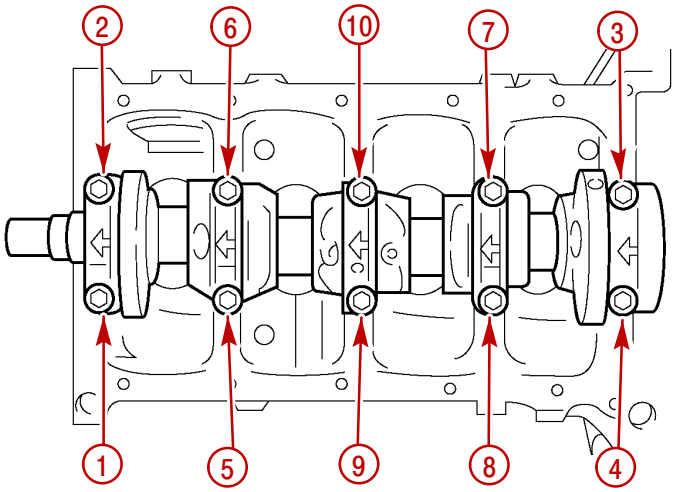

77186

Main Bearing Cap Removal Sequence

8. Remove crankshaft from cylinder block.

Cleaning

1. Clean crankshaft in solvent and dry with compressed air.
2. Clean oil passages.

Inspection

1. Inspect crankshaft for nicks, scratches and cracks.
2. Inspect crankshaft journals and oil seal surfaces for excessive wear.

CRANKSHAFT NITRIDE TREATMENT INSPECTION

IMPORTANT: To increase crankshaft strength, Nitride Treatment has been applied. Because of this, it is not possible to regrind the crankshaft surfaces.

A 5 to 10% solution of ammonium cuprous chloride dissolved in distilled water can be used by trained technicians to test whether the crankshaft's nitride treatment is still effective.

⚠ CAUTION

Ammonium cuprous chloride in solution is highly corrosive. The solution can cause corrosion damage to parts of the crankshaft metal that have not had Nitride Treatment. The solution should not contact the oil ports and surrounding untreated areas of the crankshaft or damage to the crankshaft could occur.

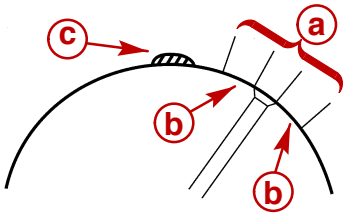

77211

a - No Contact Area
b - 10 mm
c - Ammonium Cuprous Chloride

If there is no discoloration after 30 or 40 seconds, the crankshaft is considered usable.

Steam cleaning of the crankshaft surfaces immediately after such a test is required.

CRANKSHAFT RUNOUT

1. Place crankshaft in cylinder block or on V-blocks.
2. Set a dial indicator to the center of the crankshaft journal.
3. Gently turn the crankshaft in the normal direction of rotation. Read dial indicator as crankshaft is turned.
4. Replace crankshaft if runout exceeds the specified limit.

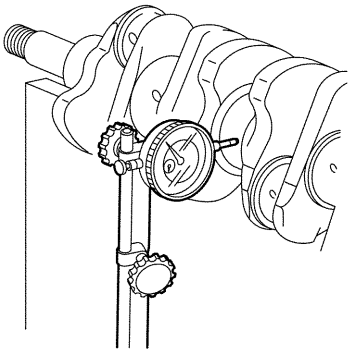

77213

Crankshaft RunOut

Description		mm (in.)
Crankshaft Runout	Production	0.05 (0.002) or less
	Limit	0.06 (0.002)

BEARING TENSION

1. Ensure that main bearing installs under tension. It should require firm pressure to fit the bearing into position.

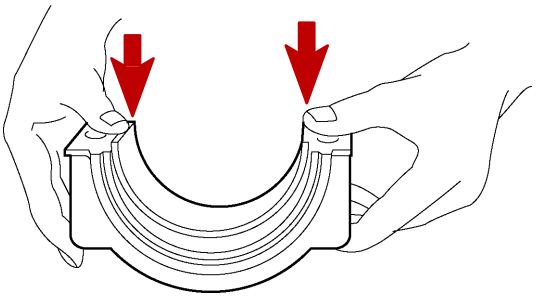

77214

Main Bearing Tension

MAIN BEARING JOURNAL AND ROD JOURNAL DIAMETER

1. Using a micrometer measure crankshaft journal diameters at points “**a**” and “**b**” on one side of journal then repeat measurements on opposite side of journal.

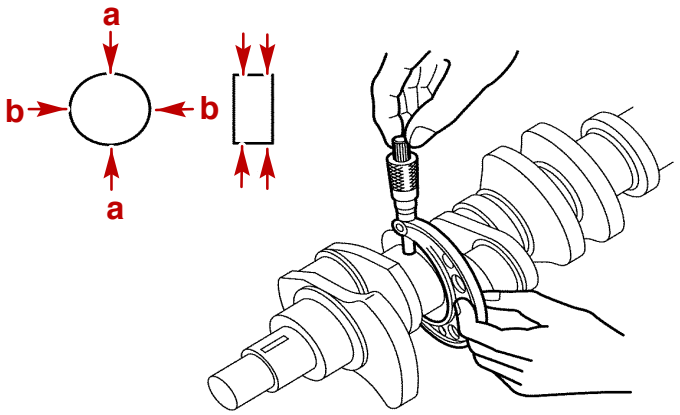

Main Journal and Connecting Rod Journal Measurement

2. Measure connecting rod journal diameters using same procedure as for crankshaft journals.
3. Replace crankshaft if any measured values are less than limit.

Description		mm (in.)
Main Journal Outside Diameter-Grade 1, Size Mark:	Production	51.918 - 51.928 (2.0440 - 2.0444)
	Limit	51.912 (2.0438)
Main Journal Outside Diameter-Grade 2. Size Mark	Production	51.928 - 51.938 (2.0444 - 2.0448)
	Limit	51.922 (2.0442)
Connecting Rod Journal Outside Diameter	Production	45.930 - 45.945 (1.8083 - 1.8089)
	Limit	45.926 (1.8081)
Crankshaft and Connecting Rod Journal Uneven Wear	Production	0.050 (0.002) or Less
	Limit	0.080 (0.003)

MAIN BEARING CLEARANCE

1. Install the main bearing caps with the bearings.
2. Torque the main bearing cap bolts.

Description	Nm	lb-in.	lb-ft
Bolt, Main Bearing Cap	88		65

3. Use a inside dial indicator to measure the main bearing inside diameter and taper.

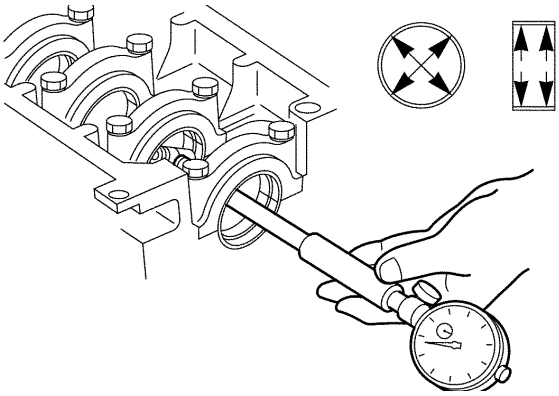

77216

Description		mm (in.)
Crankshaft Journal and Bearing Clearance	Production	.030 - .058 (0.0012 - 0.0023)
	Limit	0.08 (0.0031)

4. If the main bearing journal clearance exceeds the specified limit, the bearing and/or the crankshaft must be replaced.

ROD BEARING INSIDE DIAMETER

1. Install the bearing in the connecting rod.
2. Torque the bearing cap bolts.

Description	Nm	lb-in.	lb-ft
Bolt, Connecting Rod Bearing Cap	25 + 100°		18 + 100°

3. Use a inside dial indicator to measure the connecting rod bearing inside diameter.

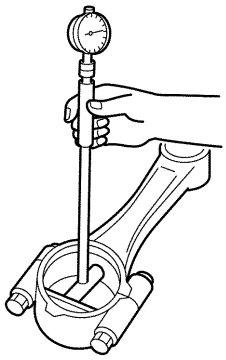

77217

ROD BEARING CLEARANCE

1. If the clearance between the measured bearing inside diameter and the crankshaft rod journal exceeds the specified limit, the bearing and/or the crankshaft must be replaced.

Description		mm (in.)
Connecting Rod Journal and Bearing Clearance	Production	.025 - .058 (0.0009 - 0.0023)
	Limit	0.100 (0.0039)

MAIN BEARING CLEARANCE (WITH PLASTIGAGE)

1. Clean the cylinder block, the journal bearing fitting surface, the bearing caps and the bearings.
2. Install the bearings to the cylinder block.
3. Carefully place the crankshaft on the bearings.
4. Rotate the crankshaft approximately 30° to seat the bearing.
5. Place the Plastigage over the crankshaft journal across the full width of the bearing.

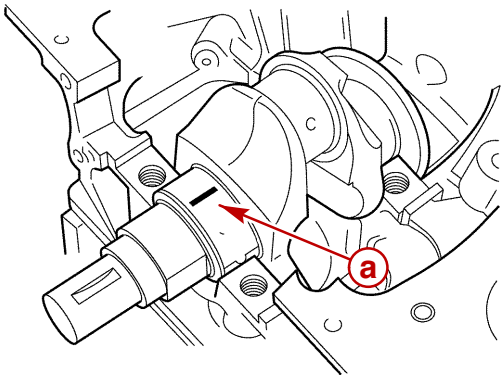

77218

a - Plastigage

6. Install the main bearing caps with the bearing.
7. Tighten the main bearing caps.

IMPORTANT: Do not allow the crankshaft to turn during bearing cap installation and tightening.

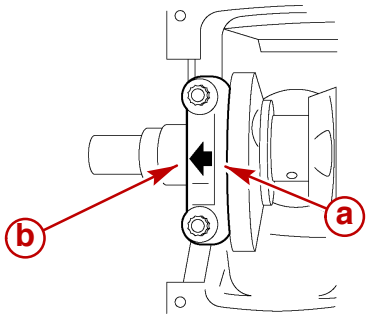

77219

a - Main Bearing Cap
b - Front

Description		Nm	lb-in.	lb-ft
Bolt, Main Bearing Cap	M11 x 1.5	88		65

8. Remove the bearing cap.
9. Compare the width of the Plastigage to the scale printed on the Plastigage container.
10. If the measured value exceeds the limit, perform the following additional steps.
    a. Use a micrometer to measure the crankpin outside diameter.
    b. Use an inside dial indicator to measure the bearing inside diameter.
    c. If the crankpin and bearing clearance exceeds the specified limit, the crankshaft and/or the bearing must be replaced.

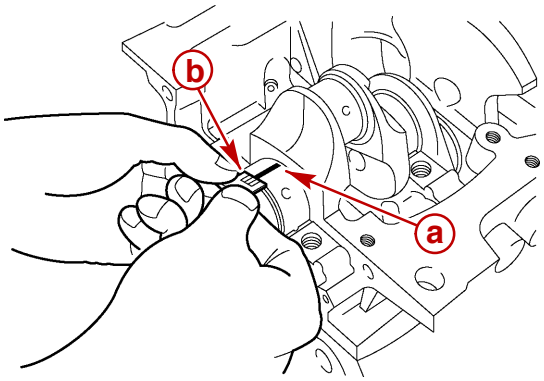

77220

a - Plastigage
b - Scale On Plastigage Container

Description	mm (in.)
Main Bearing Clearance	.030 - .058 (.0011 - .0023)

ROD JOURNAL AND BEARING CLEARANCE

1. Ensure the crankshaft, the connecting rod, the bearing cap and the bearings are clean.
2. Install the bearing to the connecting rod and the bearing cap.

IMPORTANT: Do not allow the crankshaft to move when installing the bearing cap.

3. Prevent the connecting rod from moving.
4. Attach the Plastigage to the crankpin.
5. Apply engine oil to the Plastigage to keep it from falling.
6. Install the bearing cap and torque the bolt.

Description		Nm	lb-in.	lb-ft
Nut, Connecting Rod	3/8 in. 24UNF	25 + 100°		18 + 100°

IMPORTANT: Do not allow the connecting rod to move when installing and tightening the bearing cap.

7. Remove the bearing cap.
8. Compare the width of the Plastigage attached to either the crankshaft or the bearing against the scale printed on the Plastigage container.
9. If the measured value exceeds the specified limit, perform the following additional steps.
   a. Use a micrometer to measure the crankpin outside diameter.
   b. Use an inside dial indicator to measure the bearing inside diameter.
   c. If the crankpin and bearing clearance exceeds the specified limit, the crankshaft and/or the bearing must be replaced.

Description		mm (in.)
Connecting Rod Journal and Bearing Clearance	Production	.025 - .058 (0.0009 - 0.0023)
	Limit	0.100 (0.0039)

MAIN BEARING SELECTION

When installing new main (crankshaft) bearings or inspecting old bearings, refer to the Main Bearing Selection Table.

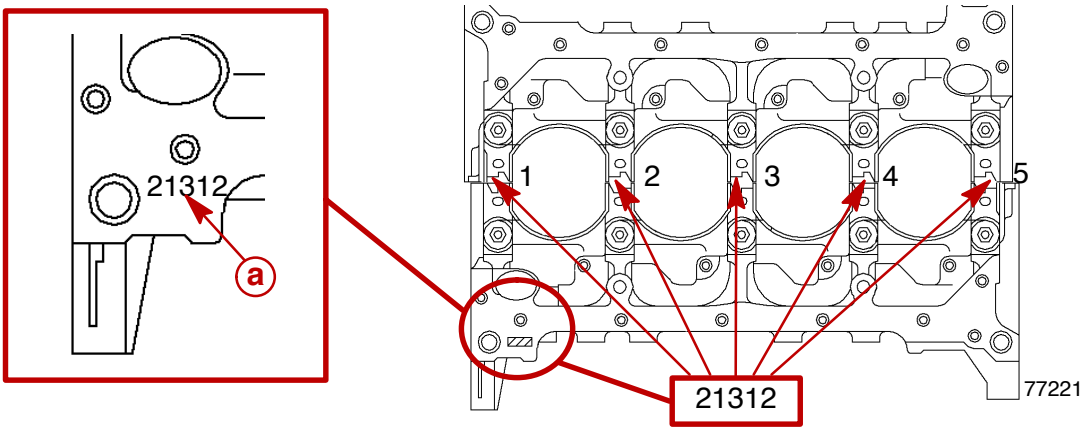

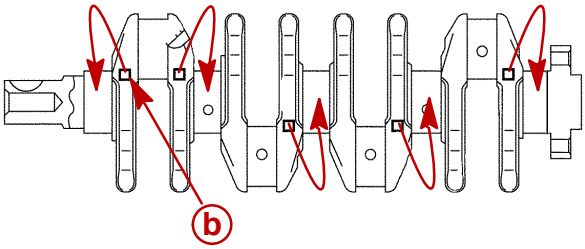

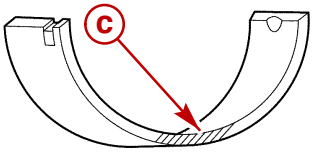

a - Cylinder Block Journal Size Marks
b - Crankshaft Journal Size Marks
c - Bearing Color Code

Main Bearing Selection Table					
Cylinder Block Journal mm (in.)		**Crankshaft Journal** mm (in.)		**Color Code**	**Oil Clearance** (Reference) mm (in.)
Size Mark	Diameter	Size Mark	Diameter		
1	55.992 - 56.000 (2.2044 - 2.2047)	▨▨	51.918 - 51.928 (2.0440 - 2.0444)	Blue	0.032–0.058 (.0013 - .0023)
		▨	51.928 - 51.938 (2.0444 - 2.0448)	Black	0.030–0.056 (.0012 - .0022)
2	55.984 - 55.992 (2.2041 - 2.2044)	▨▨	51.918 - 51.928 (2.0440 - 2.0444)		0.032–0.058 (.0013 - .0023)
		▨	51.928 - 51.938 (2.0444 - 2.0448)	Brown	0.030–0.056 (.0012 - .0022)
3	55.976 - 55.984 (2.2038 - 2.2041)	▨▨	51.918 - 51.928 (2.0440 - 2.0444)		0.032–0.058 (.0013 - .0023)
		▨	51.928 - 51.938 (2.0444 - 2.0448)	Green	0.030–0.056 (.0012 - .0022)

CONNECTING ROD BEARING SELECTION

When installing new connecting rod bearings or inspecting old bearings, refer to the Connecting Rod Bearing Selection Table.

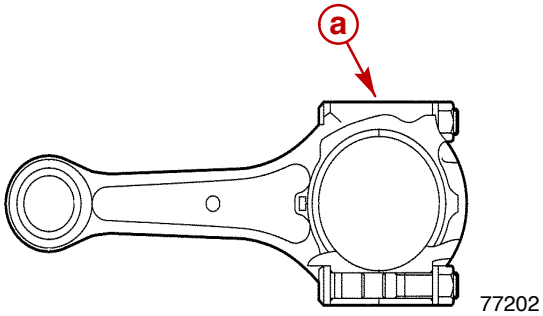

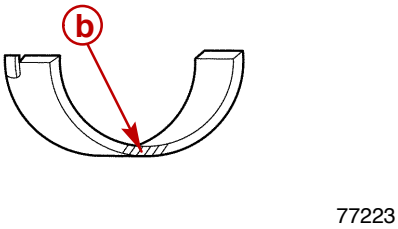

a - Connecting Rod Size Mark
b - Connecting Rod Bearing Color Code

Connecting Rod Bearing Selection Table			
Connecting Rod Size Mark	**Bearing Color Code**	**Oil Clearance (Reference) mm (in.)**	**Limit mm (in.)**
I	Blue	0.025 - 0.054 (0.0009 - 0.0021)	0.10 (0.0039)
II	Black	0.027 - 0.056 (0.0010 - 0.0022)	
III	Brown	0.029 - 0.058 (0.0011 - 0.0023)	

CYLINDER BLOCK SURFACE

Cleaning

1. Use compressed air to thoroughly clean the inside and outside surfaces of the cylinder block, the bolt and oil holes and the water jackets.

Measurement

1. Using a straight edge and a feeler gauge, measure the four sides (**A**, **B**, **E**, **F**) and the two diagonals (**C**, **D**) of the cylinder block upper face.
2. If the measured value is more than the limit, the cylinder block must be replaced.

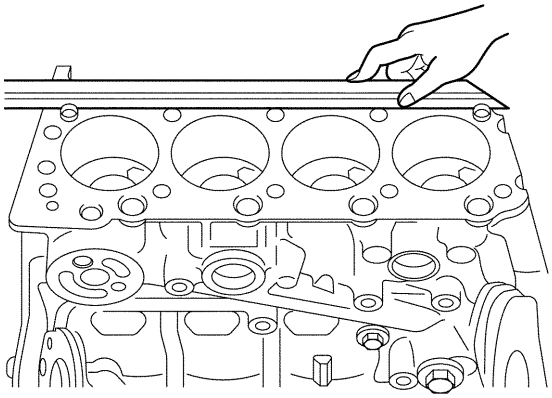

77201

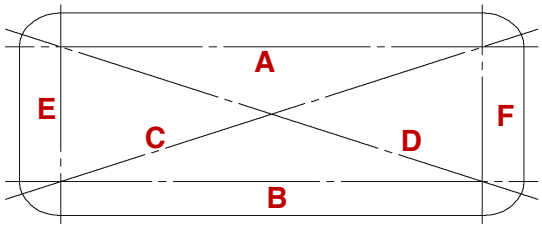

77188

Cylinder Block Upper Surface Warp

Description		mm (in.)
Upper Surface Warp	Production	0.05 (0.0019) or Less
	Limit	0.1 (0.0039)

3. Measure height of the cylinder block at the four edges to ensure block has not been machined.
4. If the measured value is less than indicated, the cylinder block must be replaced.

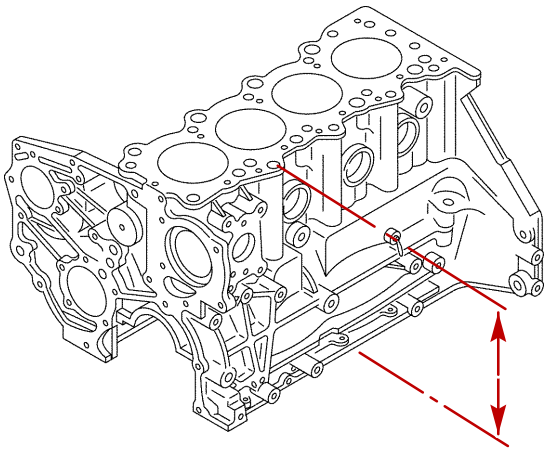

77258

Cylinder Block Height

Description		mm (in.)
Cylinder Block Height	Production	272 (10.71)

CYLINDER BLOCK BORE MEASUREMENT

1. Take measurements at measuring point "**a**" across positions W-W, X-X, Y–Y and Z–Z at 12 mm, 55 mm and 95 mm (15/32 in., 2 - 5/32 in. and 3 - 3/4 in.) depths inside bore.
2. Calculate the average value of the four measurements, at indicated depths, to determine the correct cylinder grade.

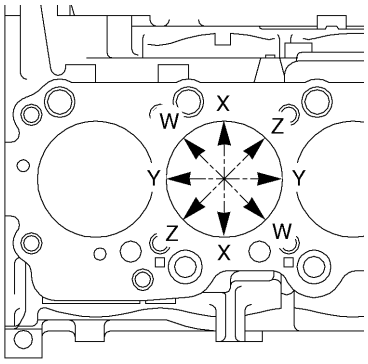

77203

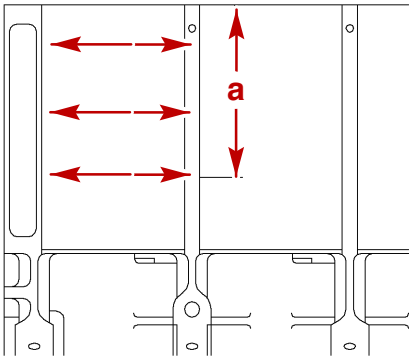

77204

Cylinder Bore Grade

Description	Bore/Piston Grade	mm (in.)
Cylinder Bore Diameters	Nominal	79.000 (3.1102)
	Grade - A	79.001 - 79.010 (3.1102 - 3.1106)
	Grade - B	79.011 - 79.020 (3.1106 - 3.1110)
	Grade - C	79.021 - 79.030 (3.1110 - 3.1114)

⚠ CAUTION

Avoid engine failure. Cylinder bores and pistons are in three standard sizes and correspond to the tolerance grades: Grade A, Grade B and Grade C. Select the correct piston grade designated for matching cylinder bore diameter.

CYLINDER BLOCK OIL SPRAY NOZZLES

Removal

1. With crankshaft removed, remove oil spray nozzles from near cylinder bores.

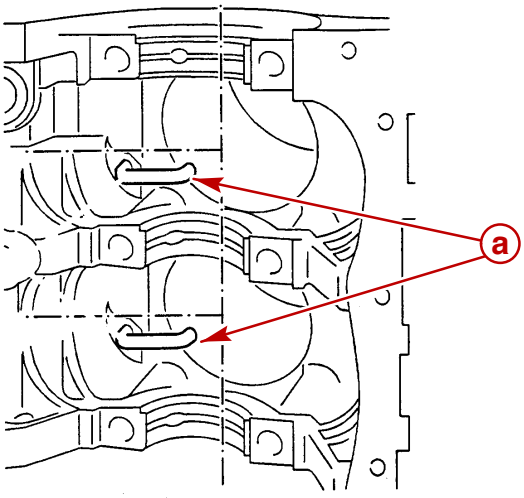

77715

a - Oil Spray Nozzles

Inspection

1. Clean passages of oil spray nozzles and cylinder block.
2. Check for damage on nozzles.
3. Replace if necessary.

Installation

1. Apply sealant around outside of oil spray nozzle.

Description	Where Used	Method of Use	Part Number
Loctite 262, Loctite 962T or Threebond 1386	Oil spray nozzle	Around outside of nozzle	Obtain Locally

2. Insert oil spray nozzles into cylinder block using special tool.
3. Position nozzles perpendicular and at right angles to the crankshaft. Then complete installation.

⚠ CAUTION

Avoid engine damage. Oil spray from nozzles cools and lubricates engine components when properly distributed. Ensure oil spray nozzles are clean and correctly seated to allow proper oil spray distribution.

4. Ensure that nozzles are correctly seated.

Installation

MAIN BEARINGS, CRANKSHAFT AND THRUST BEARINGS

IMPORTANT: The crankshaft upper main bearings have an oil hole and an oil groove. The lower bearings do not.

1. Carefully wipe any foreign material from the upper main bearing and the upper bearing fitting surfaces.
2. Install bearings as indicated.

NOTE: *Locate the position mark applied at disassembly if the removed upper main bearings are to be reused. Position accordingly.*

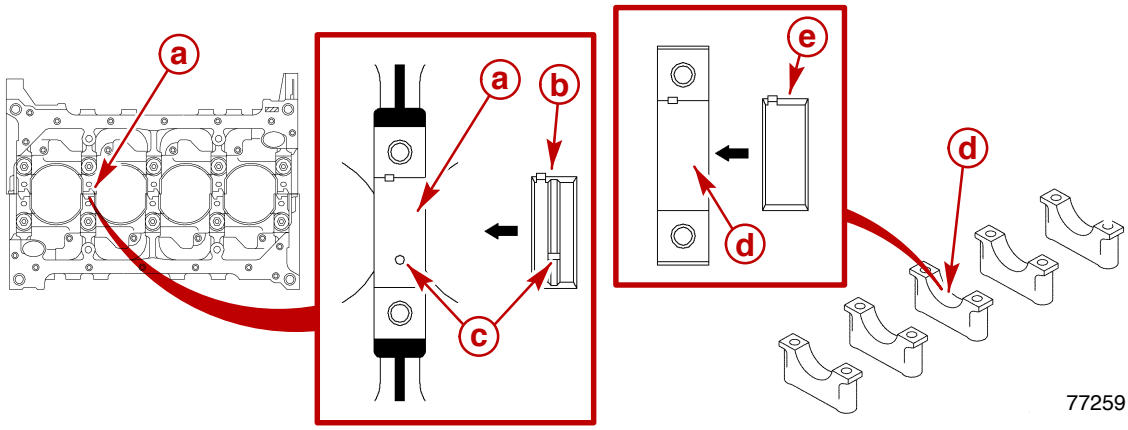

a - Cylinder Block Fitting Surface
b - Upper Bearing Half With Oil Groove
c - Oil Hole
d - Bearing Cap Fitting Surface
e - Lower Bearing Half Without Oil Groove

NOTE: *Do not apply engine oil to the bearing back faces and the cylinder block bearing fitting surfaces.*

3. Apply an ample coat of engine oil to the crankshaft journals and the crankshaft bearing surfaces before installing the crankshaft.

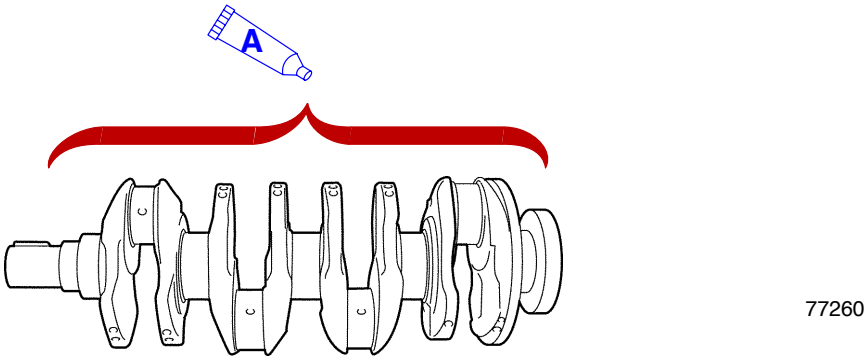

Description		Where Used	Method of Use	Part Number
A	Engine Oil	Crankshaft	Coat surfaces	Obtain Locally

4. Install the crankshaft into the cylinder block and bearings.

5. Apply an ample coat of engine oil to the crankshaft thrust bearings.

IMPORTANT: The crankshaft thrust bearing oil grooves MUST face the crankshaft not the cylinder block.

6. Install the crankshaft thrust bearings with oil grooves facing cylinder number 2 crankshaft journal.

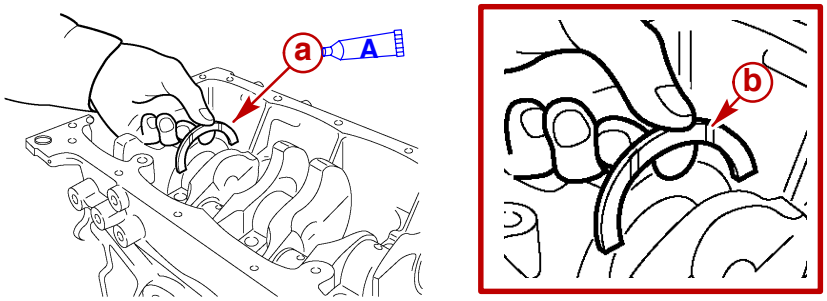

77261

a - Crankshaft Thrust Bearing
b - Oil Grooves

Description		Where Used	Method of Use	Part Number
A	Engine Oil	Crankshaft and thrust bearings	Coat surfaces	Obtain Locally

IMPORTANT: The bearing cap arrow marks MUST face the front of the engine and number must correspond to the bearing cap journal.

7. Apply a coat of engine oil to the threads and mating surfaces of bearing cap bolts.

Description	Where Used	Method of Use	Part Number
Engine Oil	Bearing cap bolt	Coat surfaces	Obtain Locally

8. Tighten the bearing cap bolts a little at a time in numbered sequence (1 - 10).
9. Torque all bearing cap bolts in numbered sequence (1 - 10).

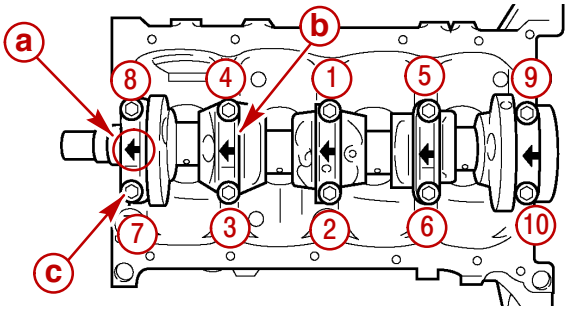

77262

Main Bearing Cap Torque Sequence

a - Arrow Mark (Points To Front)
b - Bearing Cap
c - Bolts

Description		Nm	lb-in.	lb-ft
Bolt, Main Bearing Cap	M11 x 1.5	88		65

10. Manually rotate the crankshaft to ensure that it turns smoothly.

11. At the same time, rotate the crankshaft until the crankpin is at BDC for cylinder that is ready for first piston to be installed.
12. Carefully wipe any foreign material from the connecting rod bearings and the connecting rod bearing fitting surfaces.

NOTE: *Do not apply engine oil to the bearing back faces and the connecting rod bearing fitting surfaces.*

13. Install the upper bearing to connecting rod.
14. Insert bearing shells into connecting rod and matching rod cap. Coat bearings and crankpin surfaces with a mixture of 20% SAE 30W engine oil and 80% Needle Bearing Lubricant.

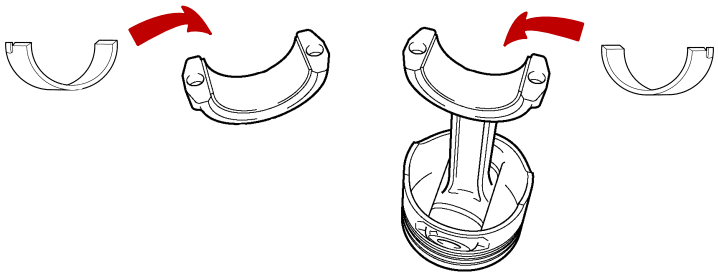

77251

NOTE: *Molybdenum disulfide grease will facilitate smooth break-in when the engine is first started after reassembly.*

Description	Where Used	Method of Use	Part Number
Needle Bearing Assembly Lubricant [1]	Rod bearing and crankshaft journal	Coat surfaces	92 - 802868A1

[1] Used in a mixture of 20% SAE30W engine oil and 80% Needle Bearing Lubricant.

15. Apply a coat of engine oil to the circumference of each piston ring and piston. Apply a coat of molybdenum disulfide grease to the two skirts on each piston.
16. Position the piston ring gaps as shown in the illustration.

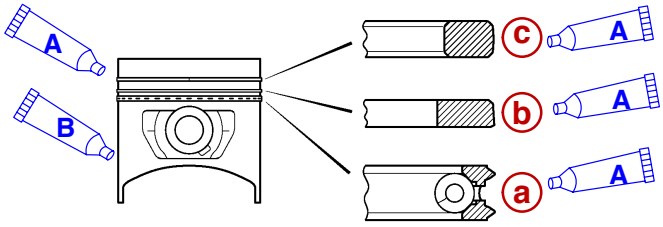

77248

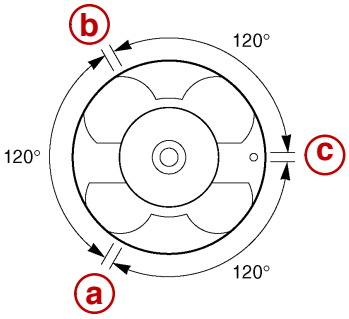

77250

a - Oil Ring
b - Second Compression Ring
c - First Compression

	Description	Where Used	Method of Use	Part Number
A	Engine Oil	Piston and rings	Coat surfaces	Obtain Locally
B	Molybdenum Disulfide Grease	Piston skirt	Coat the two skirts on each piston.	Obtain Locally

17. Apply a coat of engine oil to the cylinder wall.

Description	Where Used	Method of Use	Part Number
Engine Oil	Cylinder Bores	Coat surfaces	Obtain Locally

18. Use a piston ring compressor to compress the piston rings.
19. Position the front mark on the top of piston so that it is facing the front of the cylinder block.

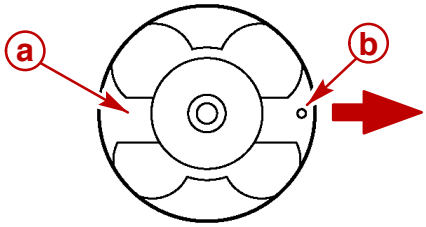

77265

a - Top Of Piston
b - Front Mark

20. Install the piston by tapping on piston top with a suitable device. Align connecting rod with crankshaft pin and tap on piston top until the rod bearing contacts crankpin.

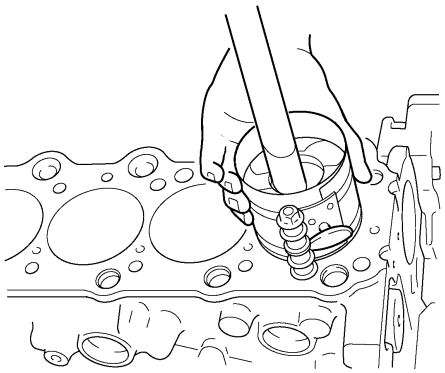

77265

NOTE: *Do not apply engine oil to the bearing back faces and the connecting rod bearing fitting surfaces.*

21. Install the connecting rod bearing cap. The bearing cap number (at the side of the bearing cap) and the connecting rod number must be the same and on the same side.

⚠ CAUTION

The bearing caps MUST be installed in the correct direction. Reversing the bearing cap direction will result in serious engine damage.

22. Apply a coat of engine oil to the threads and mating faces of each connecting rod cap, bolt and nut.
23. Torque the connecting rod cap nuts.

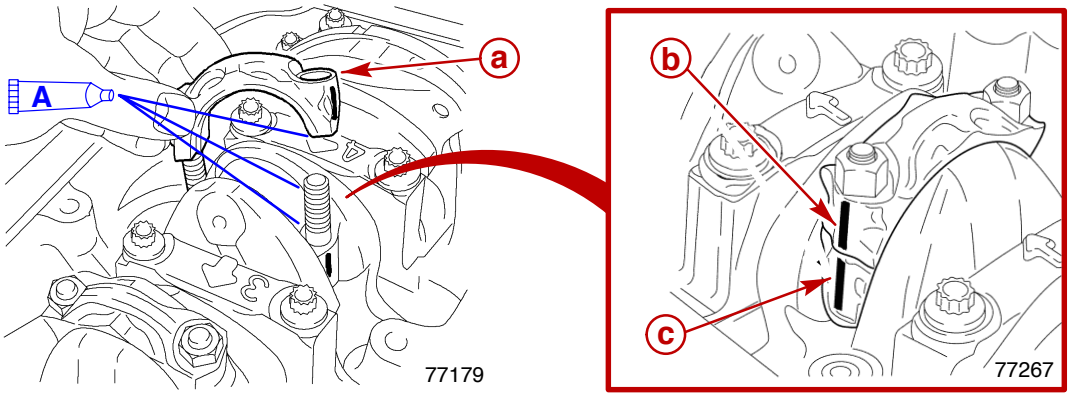

a - Rod Bearing Cap
b - Cap Number
c - Rod Number

Description		Where Used	Method of Use	Part Number
A	Engine Oil	Bolts, nuts and connecting rod	Thread length and mating faces	Obtain Locally

Description		Nm	lb-in.	lb-ft
Nut, Connecting Rod Bearing Cap	3/8 in. 24UNF	25 + 100°		18 + 100°

Oil Pump

Removal

1. Remove timing belt covers.
2. Remove crankshaft pulley and oil pump pulley.
3. Remove oil pan.
4. Remove oil pump retainer.

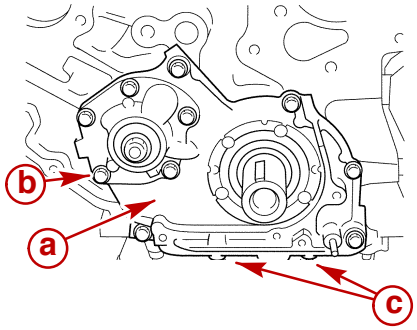

77270

a - Oil Pump Retainer
b - Bolt (10)
c - Front Oil Pan Studs And Nuts

Disassembly

1. Remove inner and outer pump rotors from cylinder block.

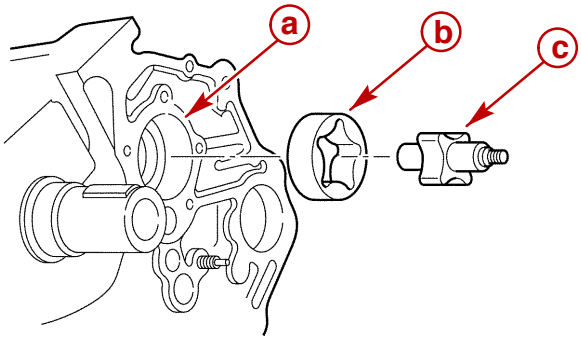

77326

a - Cylinder Block
b - Outer Rotor
c - Inner Rotor

2. Remove oil pump O-ring from back side of oil pump retainer.

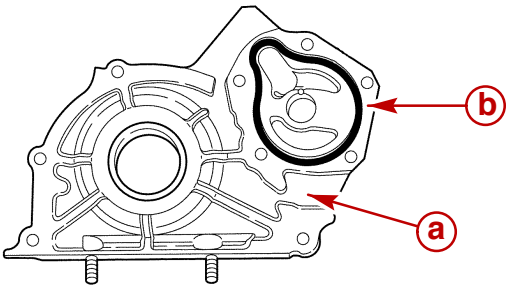

77324

a - Oil Pump Retainer
b - Oil Pump O-ring

3. Remove seals from retainer, using suitable tools.

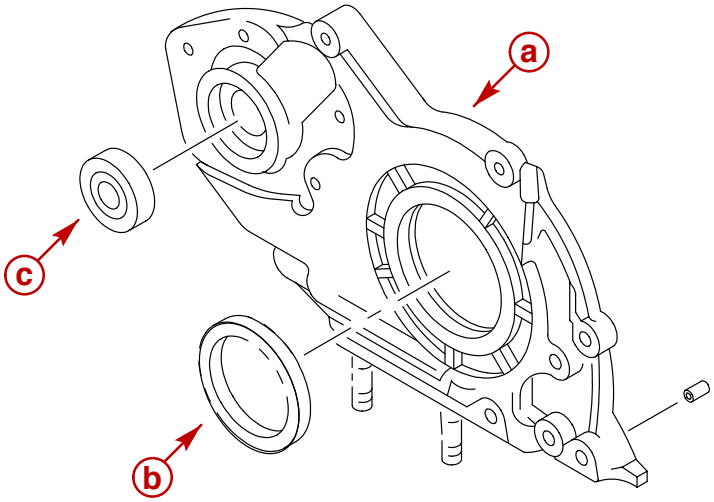

77087

a - Oil Pump Retainer
b - Crankshaft Oil Seal
c - Oil Pump Seal

Cleaning

1. Clean all sealing surfaces.
2. Remove sealant residue.
3. Wash all parts in solvent and dry with compressed air.

Inspection

1. Inspect oil pump shaft, rotors and cylinder block for excessive wear or damage. Replace oil pump assembly if excessive wear or damage is found.
2. Check clearance of oil pump shaft in cylinder block.

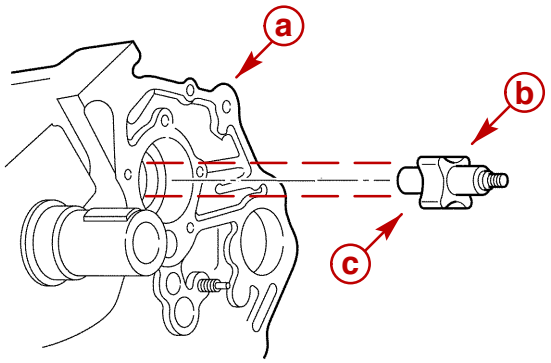

77326

a - Cylinder Block
b - Inner Rotor
c - Oil Pump Shaft

Description		mm (in.)
Oil pump shaft clearance in cylinder block	Production	0.040 - 0.125 (.0015 - .0049)
	Limit	0.200 (.0078)

3. Check oil pump rotor end float (end play).

NOTE: *Rotor end float is the difference between the combined cylinder block and retainer depths minus the thickness of the rotors.*

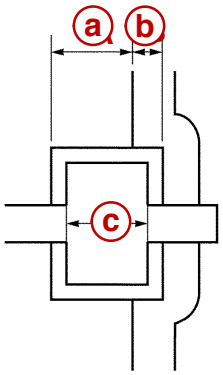

77327

a - Cylinder Block Depth
b - Retainer Depth
c - Inner and Outer Rotor Thickness

Description		mm (in.)
End Float [(**a** + **b**) – **c**]	Production	0.035 - 0.100 (.0014 - .0039)
	Limit	0.150 (.0059)

4. Check clearance between outer rotor and cylinder block.

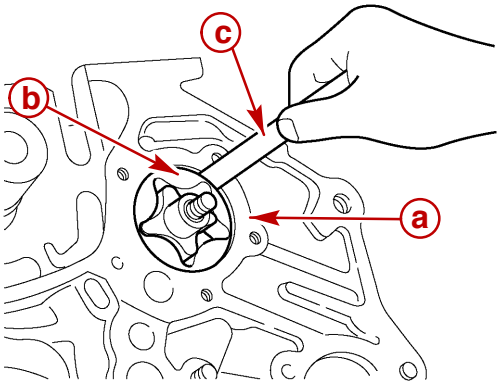

77328

a - Cylinder Block
b - Outer Rotor
c - Feeler Gauge

Description		mm (in.)
Clearance between outer rotor and cylinder block	Production	0.24 - 0.36 (0.0094 - .0141)
	Limit	.40 (0.0015)

5. Check clearance between inner and outer oil pump rotors.

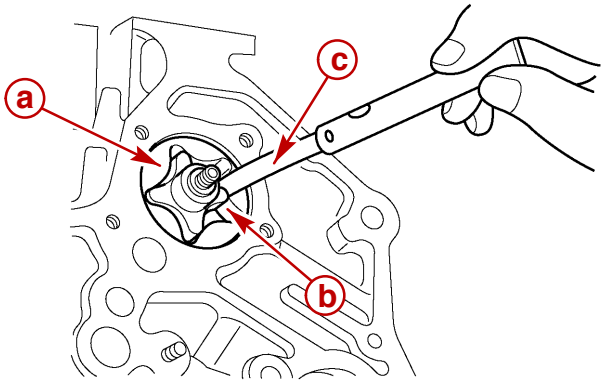

77329

a - Outer Rotor
b - Inner Rotor
c - Feeler Gauge

Description		mm (in.)
Clearance between inner and outer rotors (mesh)	Production	0.13 - 0.15 (0.0051 - .0059)
	Limit	0.20 (.0078)

Reassembly

1. Coat inner and outer oil pump rotor surfaces with engine oil.
2. Install inner and outer oil pump rotors in cylinder block.

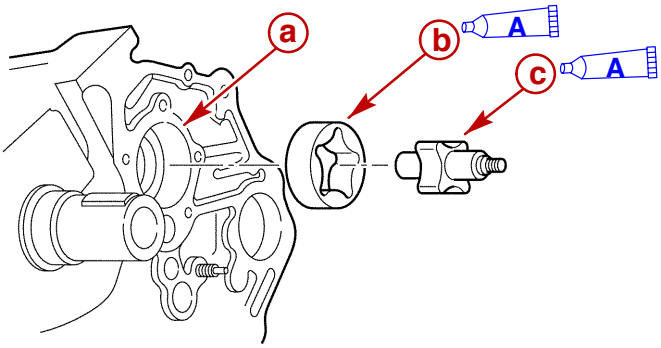

77323

a - Cylinder Block
b - Outer Pump Rotor
c - Inner Pump Rotor

	Description	Where Used	Method of Use	Part Number
A	Engine Oil	Inner and outer oil pump rotors	Coat surfaces	Obtain Locally

Installation

1. Coat sealing lips of oil seals with silicon grease. Install crankshaft seal and oil pump shaft seal in oil pump retainer.

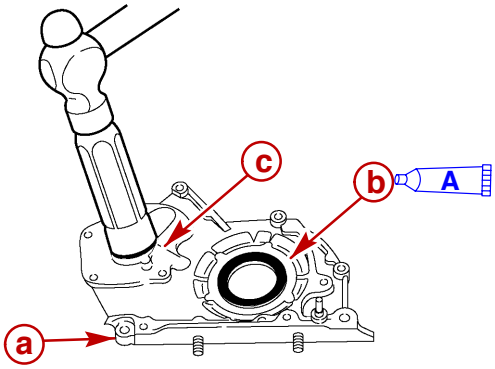

77271

a - Oil Pump Retainer
b - Crankshaft Oil Seal
c - Oil Pump Seal

	Description	Where Used	Method of Use	Part Number
A	Silicone Grease	Oil seal	Coat lips	Obtain Locally

2. Install a new oil pump O-ring in groove on rear side of oil pump retainer.

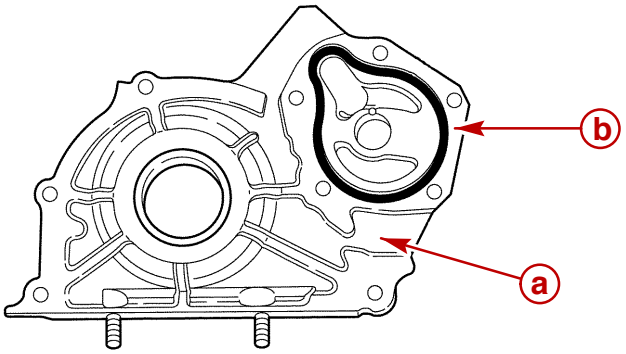

77324

a - Oil Pump Retainer
b - Oil Pump O-ring

3. Apply a bead of sealant to sealing surface of oil pump retainer where cross-hatch marks are shown in the following. A small amount of extra sealant must be added as indicated.

IMPORTANT: Ensure that a small amount of extra sealant is added where indicated.

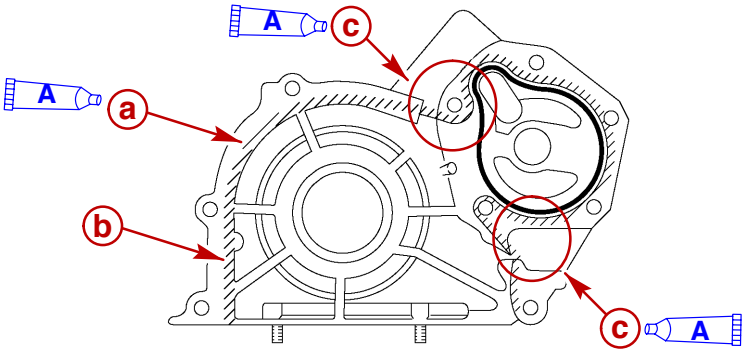

77269

a - Sealing Surface
b - Cross-Hatching Marks For Sealant Location
c - Extra Sealant Areas

Description		Where Used	Method of Use	Part Number
A	Loctite 5699	Between oil pump retainer and cylinder block	Apply a bead to sealing surfaces as indicated	Obtain Locally

4. Install oil pump retainer to cylinder block. Torque the five bolts around the oil pump in a circular pattern (1 - 5).
5. Torque remaining retainer bolts (6–10).

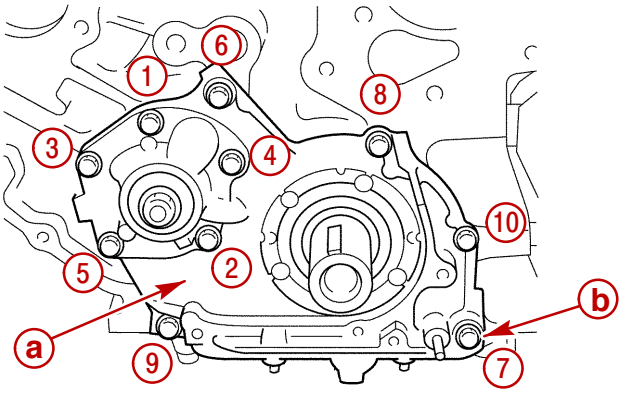

77270

Oil Pump Retainer Torque Sequence

a - Oil Pump Retainer
b - Bolts (10)

Description		Nm	lb-in.	lb-ft
Bolt, Oil Pump Retainer	M6 x 1.0	9.8	87	

6. Install oil pan.
7. Install crankshaft pulley and oil pump pulley.
8. Install timing belt and covers.

Oil Pressure Relief Valve And Check Valve

The oil pressure relief valve and check valve are installed in the lower, rear port side of the block.

Removal

1. Remove oil pressure relief valve and check valve from block.

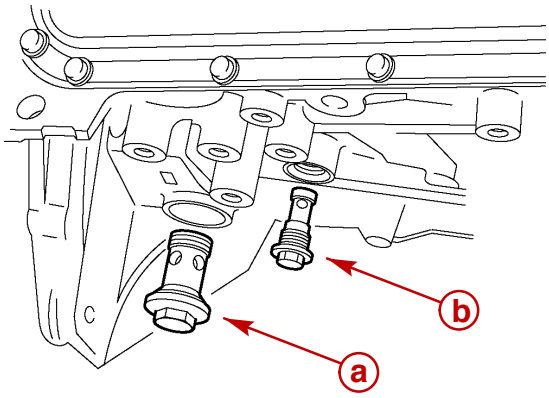

77330

a - Oil Pressure Relief Valve
b - Check Valve

Cleaning

1. Clean all sealing surfaces.
2. Wash all parts in solvent and dry with compressed air.

Inspection

1. Check that valves slide freely in their bores when coated with oil.

Installation

1. Install oil pressure relief valve and check valve into block using new sealing rings.

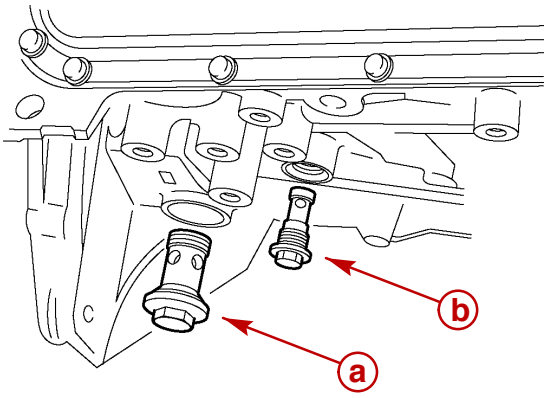

77330

a - Oil Pressure Relief Valve
b - Check Valve

Description		Nm	lb-in.	lb-ft
Valve, Oil Pressure Relief	–	39		28
Valve, Check	M18 x 1.5	29		21

Oil Filter and Oil Cooler Assembly

Exploded View

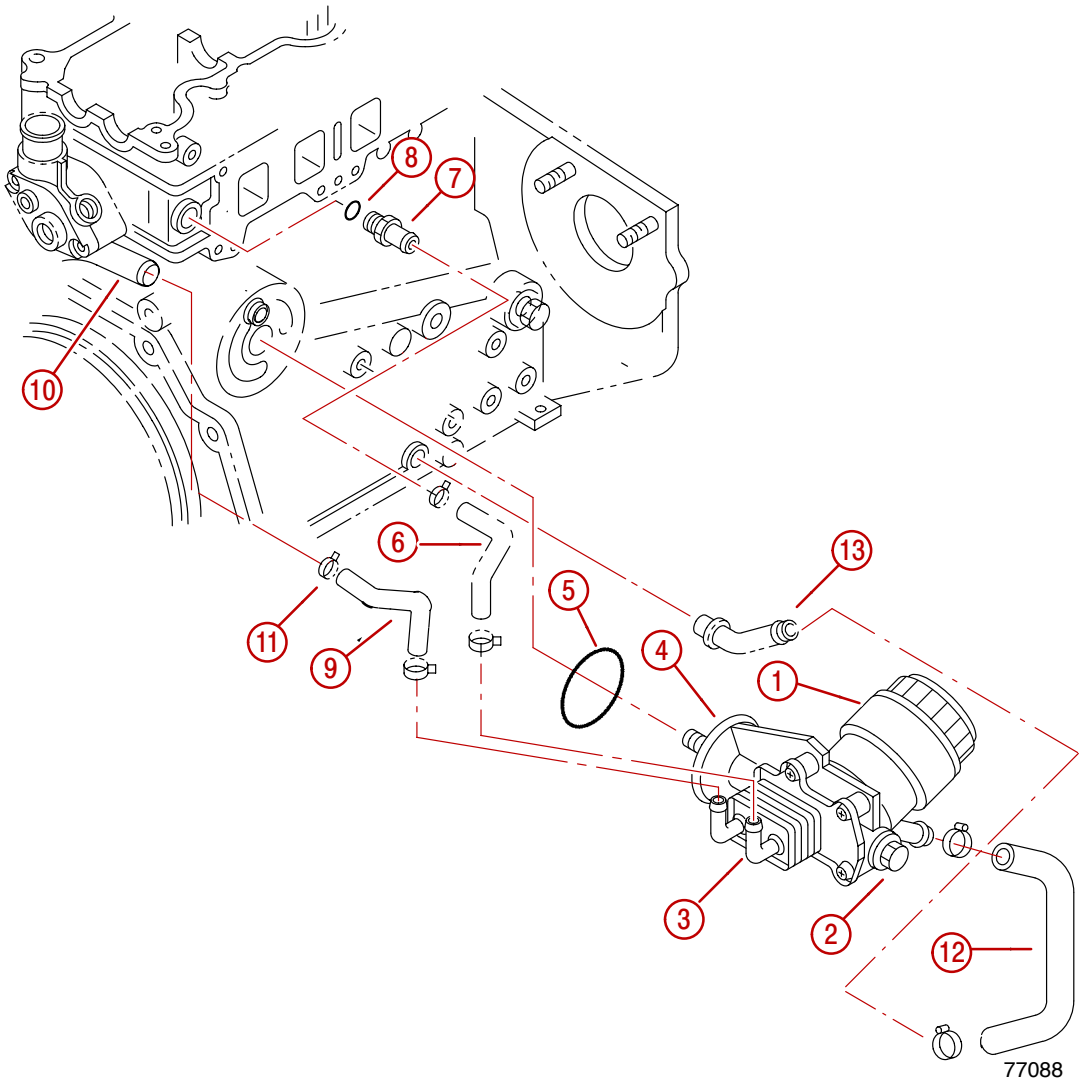

1 - Oil Filter Top Piece
2 - Hollow Retaining Bolt
3 - Oil Cooler
4 - Oil Filter Housing
5 - Housing-To-Cylinder Block O-ring
6 - Coolant Hose-To-Cylinder Head Water Fitting
7 - Cylinder Head Water Fitting
8 - Seal
9 - Coolant Hose-(To Water Pipe)
10 - Water Pipe
11 - Clamp
12 - Oil Drain Hose
13 - Oil Drain Pipe

Removal

1. Drain coolant.
2. Disconnect coolant hoses from oil cooler.
3. Remove oil filter top piece and filter.

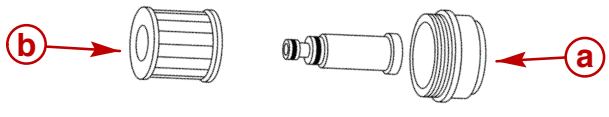

77088

a - Oil Filter Top Piece
b - Oil Filter

4. Disconnect oil drain hose from filter housing.
5. Remove oil filter housing hollow retaining bolt and O-ring.

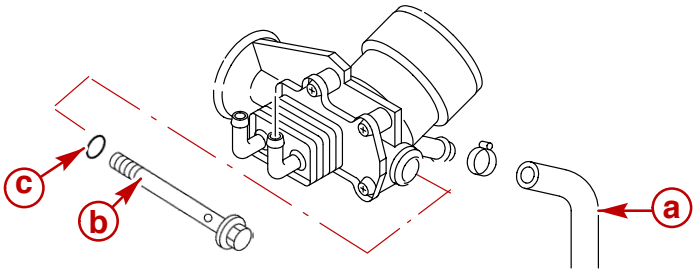

77088

a - Oil Drain Hose
b - Hollow Retaining Bolt
c - O-ring

6. Remove oil filter housing and oil cooler assembly from cylinder block.
7. Remove bolts and separate oil cooler from oil filter housing. Note position of O-ring seals.

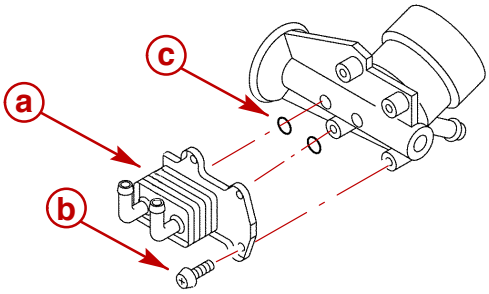

77088

a - Oil Cooler
b - Bolt
c - O-ring Seals

Cleaning

NOTE: *Element cannot be cleaned and reused. It must be replaced.*

1. Clean all sealing surfaces.
2. Wash all parts in solvent and dry with compressed air.

Inspection

1. Inspect housing and cooler sealing surfaces for nicks and burrs.
2. Inspect oil cooler for cracks or deformation.
3. Inspect oil filter housing for cracks.
4. Inspect coolant hoses. Replace if damaged or worn.

Installation

1. Install new O-rings and bolt oil cooler to oil filter housing. Torque bolts.

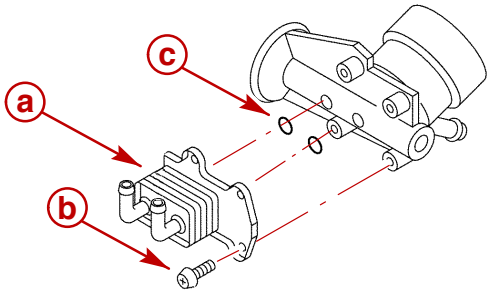

77088

a - Oil Cooler
b - Bolt
c - O-ring Seals

Description	Nm	lb-in.	lb-ft
Bolt, Oil Cooler	12	106	

2. Mount oil filter housing with oil cooler onto cylinder block. Engage the lug on the oil filter housing with locating stopper.

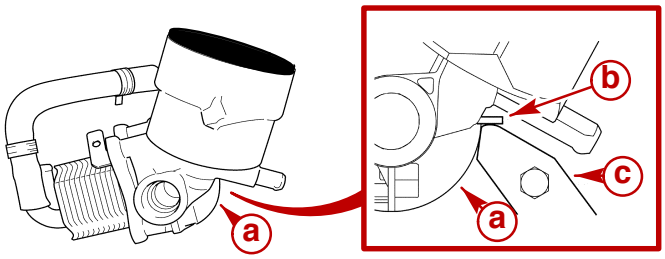

77316

a - Oil Filter Housing
b - Lug
c - Locating Stopper

3. Apply engine oil to hollow retaining bolt threads and seat. Install hollow retaining bolt with new O-ring. Torque bolt.

Description	Where Used	Method of Use	Part Number
Engine Oil	Hollow bolt and O-ring	Coat threads and surfaces	Obtain Locally

Description		Nm	lb-in.	lb-ft
Hollow Bolt, Oil Filter Housing	M20 x 1.5	110		81

4. Connect oil drain hose to filter housing.
5. Install the three new O-rings.
6. Apply a coat of engine oil to the O-rings.
7. Install the element on the top piece.

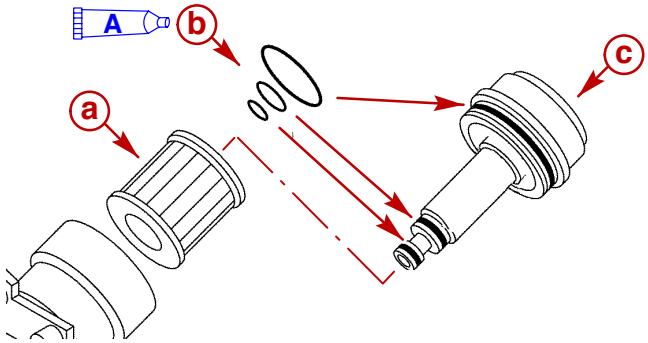

77242

a - Oil Filter Element
b - O-rings
c - Top Piece

Description		Where Used	Method of Use	Part Number
A	Engine Oil	O-rings	Coat surfaces	Obtain Locally

8. Install the top piece with the new element into the oil filter housing.
9. Turn the top piece until seated against the oil filter housing. Using the filter wrench or socket, torque top piece.

IMPORTANT: Overtightening the top piece will cause deformation and oil leaks.

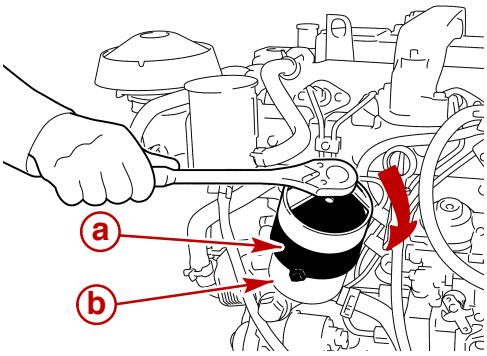

77244

a - Oil Filter Assembly
b - Filter Housing

Description	Nm	lb-in.	lb-ft
Oil Filter Top Piece	25		18

10. Ensure water fitting is not leaking. Apply specified sealant during installation if previously removed.
11. Connect and clamp coolant hoses.

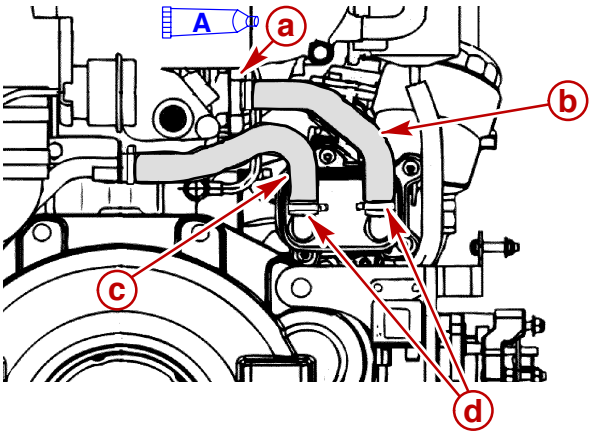

77122

a - Water Fitting
b - Hose To Fitting
c - Hose To Water Pipe
d - Clamp

	Description	Where Used	Method of Use	Part Number
A	Loctite 5900 or 5699	Water fitting for oil cooler coolant hose at block	Thread length	Obtain Locally

12. Fill closed cooling system.
13. Ensure oil level is up to, but not over, MAX mark on dipstick.
14. Pre-lubricate turbocharger and engine.
15. Operate the engine for a few minutes. Stop the engine and wait for about ten minutes.
16. Check dipstick to ensure oil level is up to, but not over, MAX mark on dipstick.
17. Start engine and check for leaks.

Oil Pan And Oil Pickup Assembly

Removal

1. Remove oil dipstick tube hollow bolt and washers and drain oil into a suitable container.
2. Remove lower oil pan.

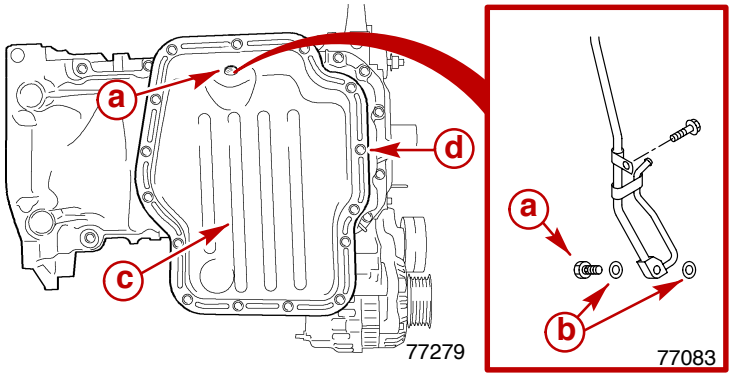

a - Hollow Bolt
b - Washer
c - Lower Oil Pan
d - Bolts (15)

3. Remove upper oil pan.

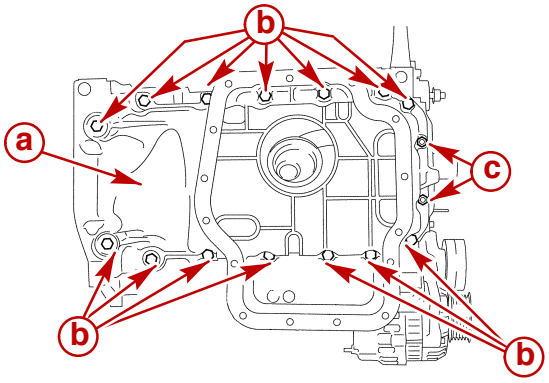

a - Upper Oil Pan
b - Bolts (14)
c - Nuts (2)

4. Remove oil pickup assembly and O-ring seal.

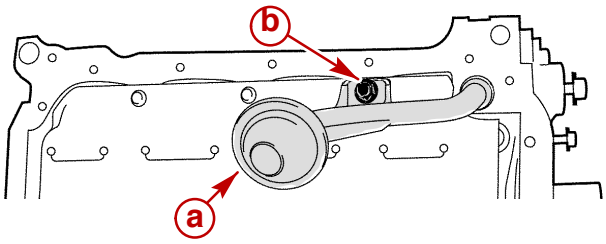

a - Oil pickup Assembly
b - Bolt

Cleaning

1. Wash parts in solvent and dry with compressed air.
2. Clean old gasket material and adhesive from all sealing surfaces.

Inspection

1. Inspect the oil pans and components for fatigue cracks.
2. Check all welds for leaks.
3. Inspect oil pick-up assembly for fatigue cracks or damage.

Installation

1. Install new O-ring seal on oil pickup assembly. Coat surfaces of O-ring with clean engine oil.
2. Install oil pickup assembly. Torque bolt.

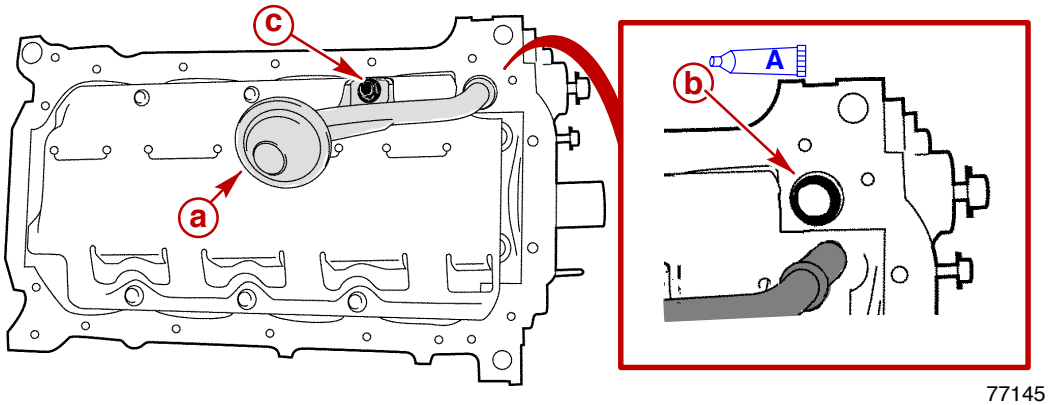

77145

a - Oil pickup Assembly
b - O-ring
c - Bolt

	Description	Where Used	Method of Use	Part Number
A	Engine Oil	O-ring	Coat surfaces	Obtain Locally

Description		Nm	lb-in.	lb-ft
Bolt, Oil Pickup Assembly	M8 x 1.25	26		19

3. Mount the Aligner Tool (91-883859) as shown, to align cylinder block and upper oil pan. Use 2 M6 x 1.0 x 10mm–16mm long bolts obtained locally to hold in place temporarily.

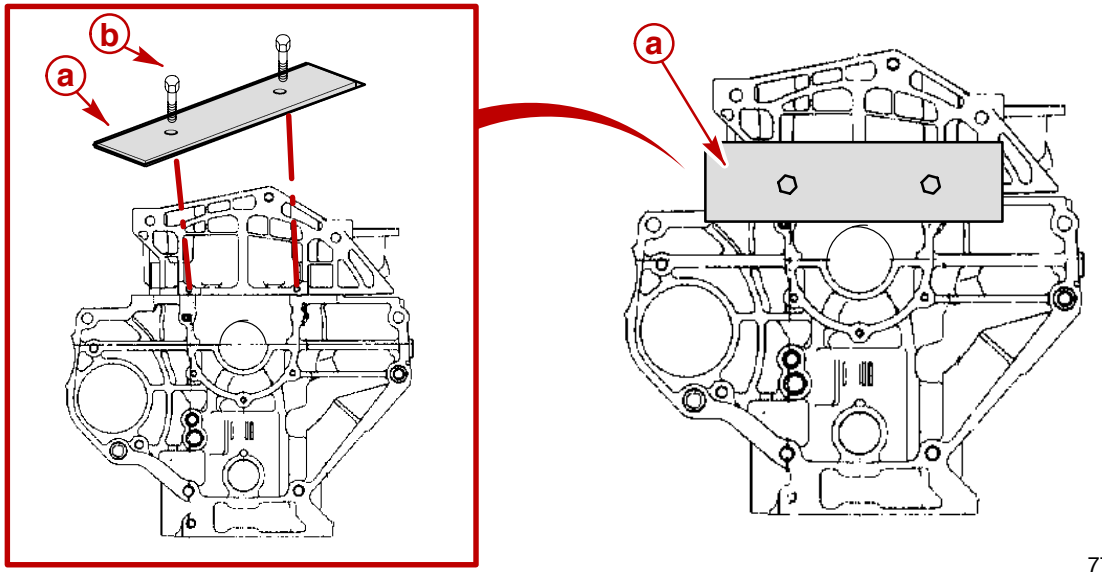

a - Aligner Tool
b - Bolts

4. Apply a 4 mm (5/32 in.) bead of specified sealant to sealing surface of cylinder block. Ensure that sealer application is around the outside of studs on front and rear.

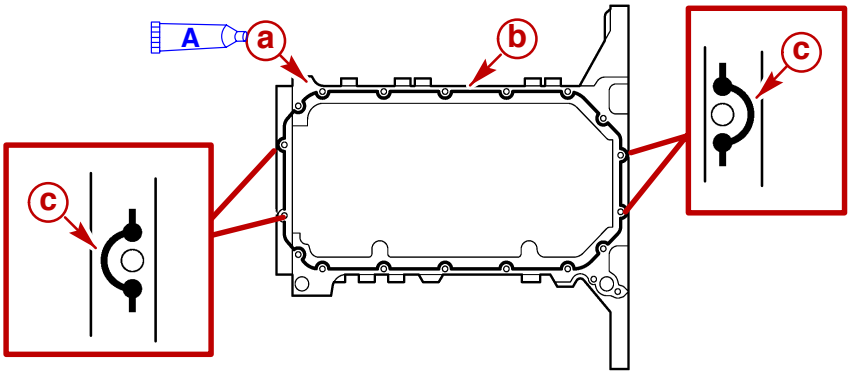

a - Sealing Surface
b - Sealer
c - Sealer Application Around Studs

	Description	Where Used	Method of Use	Part Number
A	Loctite 5999	Upper oil pan to cylinder block	Apply a bead to sealing surfaces as specified	Obtain Locally

5. Install upper oil pan to cylinder block and position squarely against the Aligner Tool. Temporarily hand tighten bolts and nuts.
6. Ensure upper oil pan is aligned to cylinder block and torque bolts and nuts.

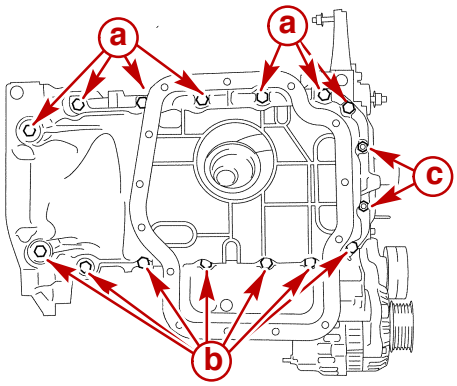

77278

a - Upper Oil Pan
b - Bolt (14)
c - Nuts (2)

Description		Nm	lb-in.	lb-ft
Nut / Bolt, Upper Oil Pan	M6 x 1.0	9.8	87	

7. Remove the two M6 bolts and the Aligner Tool.
8. Apply a 4 mm (5/32 in.) bead of specified sealant to sealing surface of upper oil pan.
9. Install lower oil pan. Torque bolts.
10. Install oil dipstick tube assembly with new sealing washers. Torque hollow bolt.

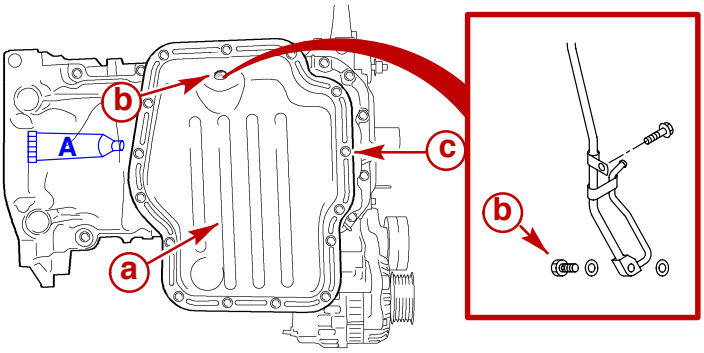

77279

a - Lower Oil Pan
b - Dipstick Tube Hollow Bolt And Washer
c - Bolts (15)

Description		Where Used	Method of Use	Part Number
A	Loctite 5699	Lower oil pan to upper oil pan	Apply a bead to sealing surfaces as specified	Obtain Locally

Description		Nm	lb-in.	lb-ft
Bolt, Lower Oil Pan	M6 x 1.0	9.8	87	
Hollow Bolt, Dipstick Tube	M14 x 1.5	39		29

Rear Oil Seal

Removal

1. Remove flywheel housing.
2. Remove flywheel coupler.
3. Remove lower oil pan.
4. Remove upper oil pan.
5. Hold flywheel using special lock tool or equivalent. Loosen and remove bolts.
6. Remove the flywheel washer and flywheel.

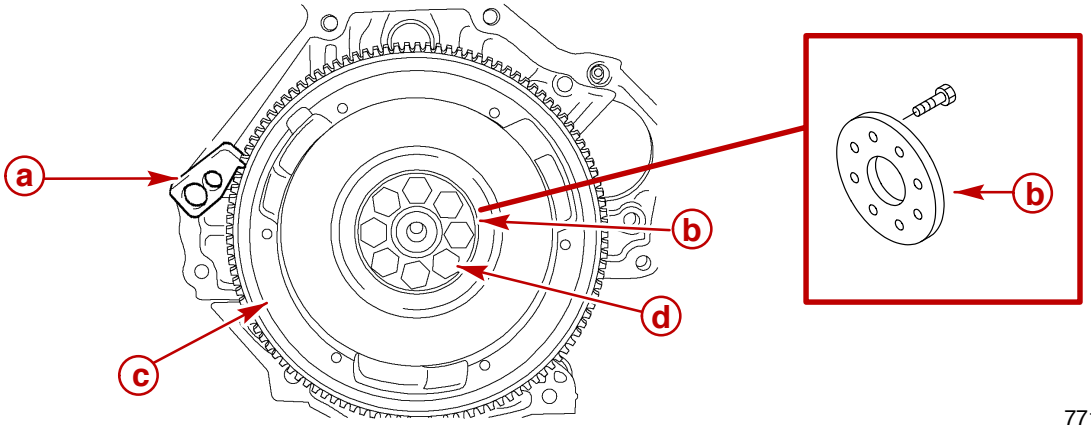

77137

a - Lock Tool
b - Flywheel Washer
c - Flywheel
d - Bolts (8)

7. Remove rear oil seal retainer bolts.
8. Remove retainer from cylinder block. Ensure that sealing surfaces are not damaged.

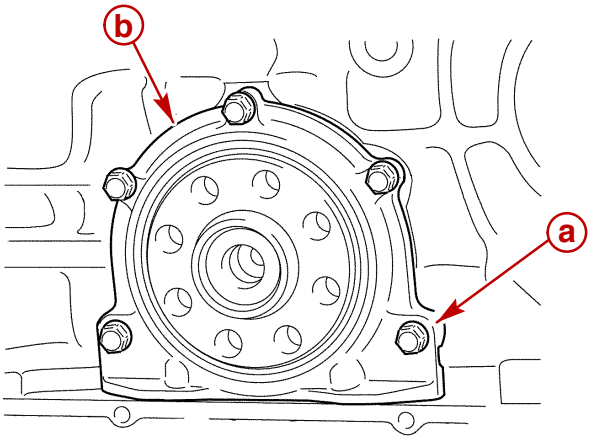

77138

a - Bolt
b - Retainer

9. Carefully pry out old seal using a suitable tool.

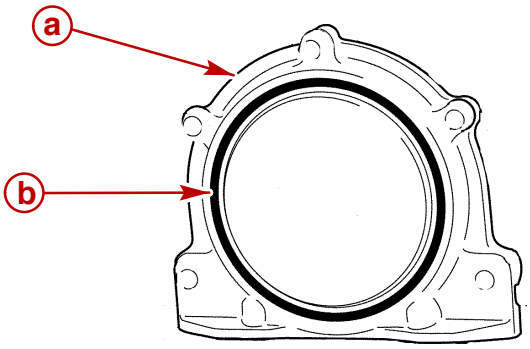

77138

a - Retainer
b - Rear Oil Seal

Cleaning

1. Clean sealing surfaces.
2. Remove sealant residue.

Inspection

1. Inspect seal retainer sealing area for nicks and burrs.
2. Inspect seal retainer and crankshaft sealing area for nicks, burrs and scoring.

Installation

1. Coat inner lip of new rear oil seal with clean engine oil.
2. Install seal in rear oil seal retainer using seal driver.

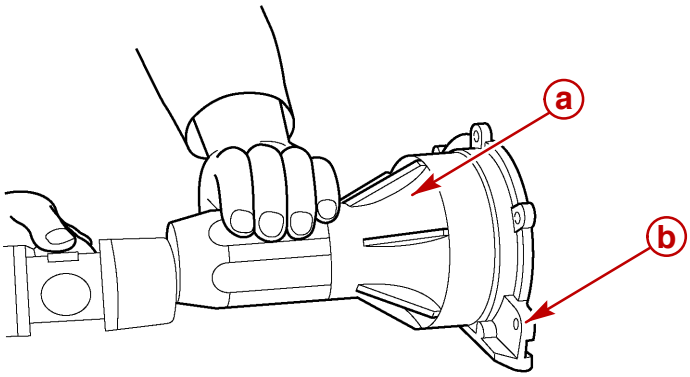

77273

a - Seal Driver
b - Retainer

3. Apply a bead of specified sealant to sealing surfaces of rear oil seal retainer.

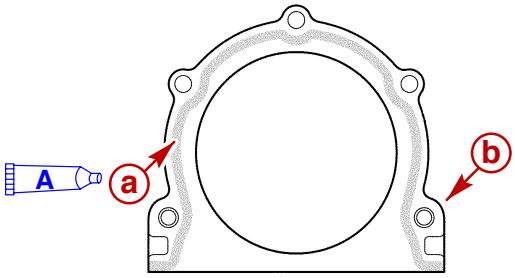

77272

a - Sealant
b - Retainer

Description		Where Used	Method of Use	Part Number
A	Loctite 5900	Between oil seal retainer and cylinder block	Apply a bead to sealing surfaces as specified	Obtain Locally

4. Install rear oil seal retainer. Torque bolts.

Description		Nm	lb-in.	lb-ft
Bolt, Rear Oil Seal Retainer	M6 x1.0	9.8	87	

5. Install upper and lower oil pans.
6. Suitably clean or chase the threads of flywheel bolt holes in crankshaft before proceeding.
7. Install flywheel washer and flywheel.

⚠ CAUTION

Avoid severe engine damage or injury. DO NOT reuse flywheel mounting bolts. They are suitable for one time use only. They could fail if used more than once.

8. Apply sealant to beginning threads of 8 NEW flywheel bolts and install the flywheel. DO NOT reuse flywheel mounting bolts.

IMPORTANT: The installation time using this sealant, including the torque check, is ten minutes maximum.

9. Hold flywheel using special lock tool. Tighten bolts in the numerical sequence shown. Torque bolts.

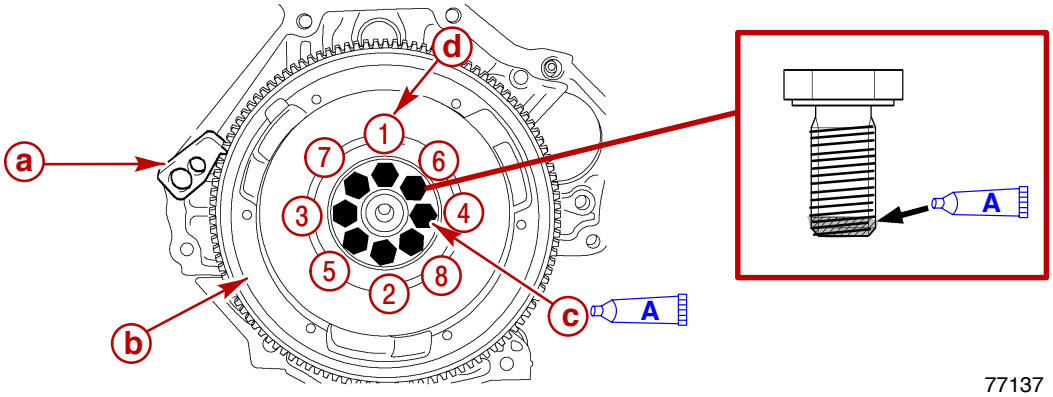

a - Lock Tool
b - Flywheel
c - NEW Flywheel Bolts (8)
d - Sequence

Description		Where Used	Method of Use	Part Number
A	Loctite 262	New flywheel retaining bolts	Apply to beginning threads	Obtain Locally

Description		Nm	lb-in.	lb-ft
Bolt, Flywheel	M11 x 1.25	29 + 60°		21 + 60°

10. Install flywheel coupler. Torque bolts.

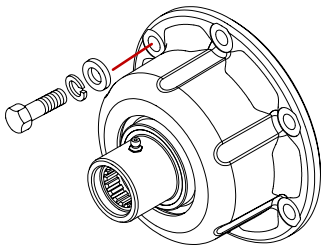

Description		Nm	lb-in.	lb-ft
Bolt, Coupler	M10 x 1.5	44.1		33

11. Install flywheel housing. Torque bolts and nuts.

NOTE: *There are different thread patterns and fastener combinations involved. Ensure the proper placement of each.*

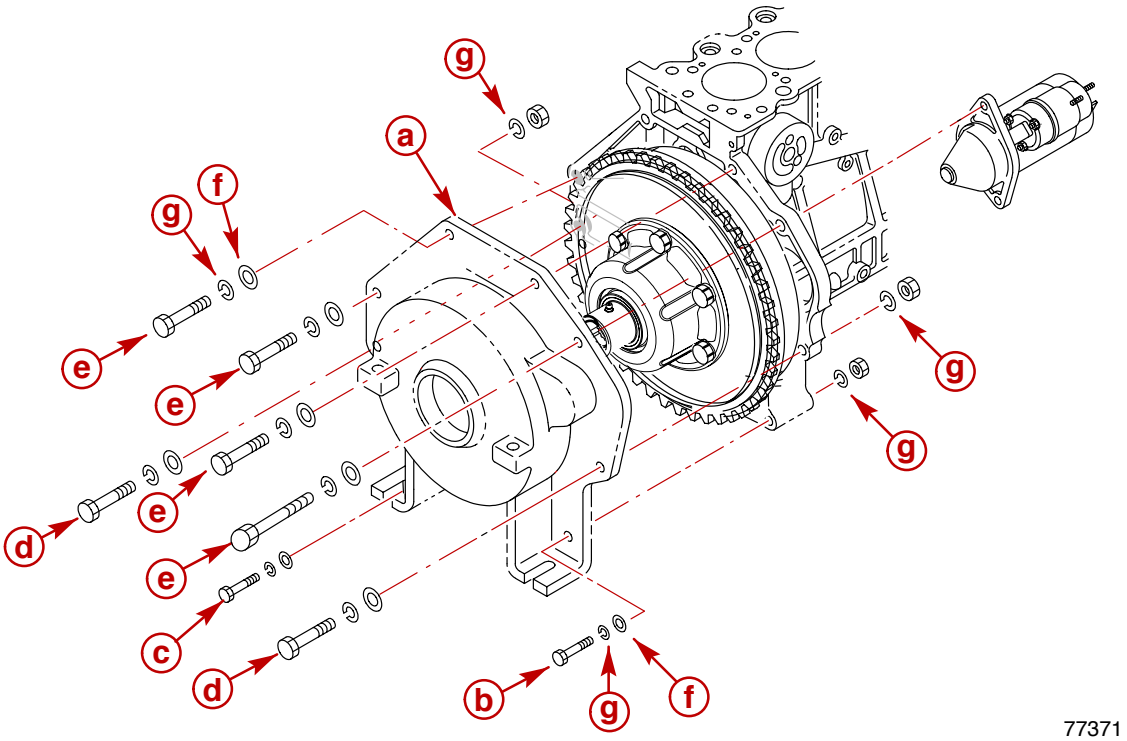

a - Flywheel Housing
b - Bolt, Washers and Nut - 10M x 1.5
c - Bolt and Washers - 10M x 1.5
d - Bolt, Washers and Nut - 12M x 1.25
e - Bolt and Washers - 12M x 1.75
f - Flat Washer
g - Lock Washer

Description		Nm	lb-in.	lb-ft
Bolt and Nut	M12	86		64
Bolt and Nut	M10	44.1		33

Front Oil Seal

Removal

1. Remove engine drive belts.
2. Remove timing belt covers and timing belt.
3. Remove crankshaft pulley.
4. Remove fastening bolt for timing belt drive pulley. Counterhold using special tool.

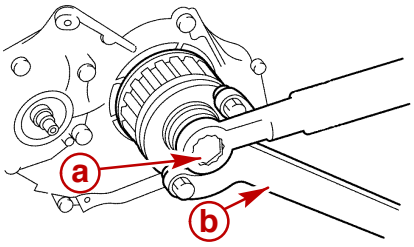

77140

a - Crankshaft Pulley Bolt
b - Special Tool

5. Remove timing belt drive pulley from crankshaft using puller.

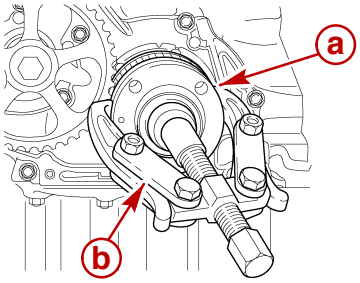

77141

a - Crankshaft Pulley
b - Puller

6. Using a suitable tool, remove front oil seal from front oil seal retainer. Ensure that sealing surfaces and crankshaft are not damaged.

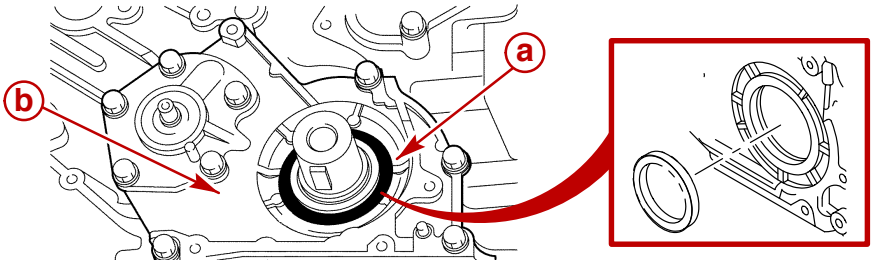

77142

a - Front Oil Seal
b - Retainer

Cleaning

1. Clean bore of seal retainer where seal resides.
2. Clean crankshaft sealing area.

Inspection

1. Inspect bore of seal retainer for nicks and burrs.
2. Inspect crankshaft seal area for nicks, burrs and scoring.

Installation

1. Coat inner lip of new seal with engine oil.

Description	Where Used	Method of Use	Part Number
Engine Oil	Front oil seal	Coat lips	Obtain Locally

2. Install seal using a suitable seal driver.

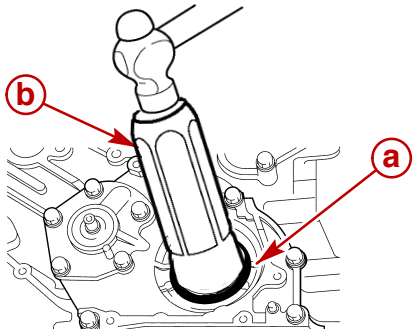

77370

a - Front Oil Seal
b - Seal Driver

3. Hold flywheel using special lock tool.
4. Install crankshaft timing belt pulley parts in order. Concave side of belt guide plate faces rear. Torque bolt.

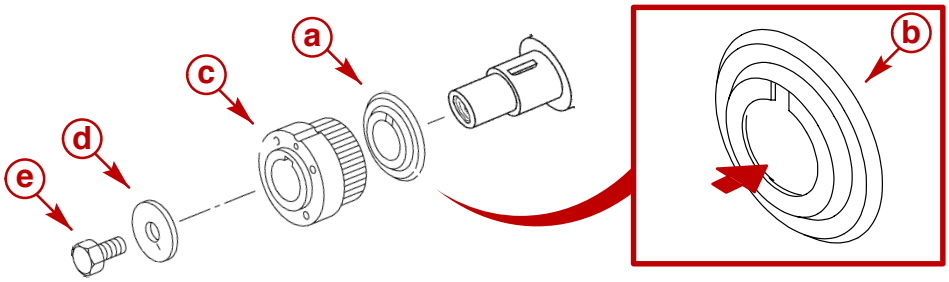

77085

a - Belt Guide Plate
b - Concave Side
c - Crankshaft Timing Belt Pulley
d - Flat Washer
e - Bolt

Description		Nm	lb-in.	lb-ft
Bolt, Crankshaft	M16 x 1.5	196		144

5. Install timing belt and timing belt covers.
6. Install serpentine belt and power steering belt, if equipped.

Front Engine Mounts

Starboard

1. Install the starboard engine mount bracket to the cylinder block.
2. Torque mount bolts.
3. Install the rear bracket to the injection pump and mount bracket.
4. Torque bracket to mount bolts and bracket to injection pump bolts.
5. Install pedestal mount assembly to trunion.
6. After trunion and mount are adjusted, torque trunion clamping bolt.

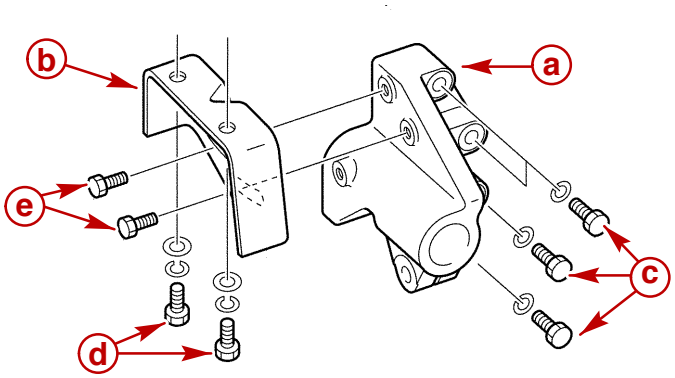

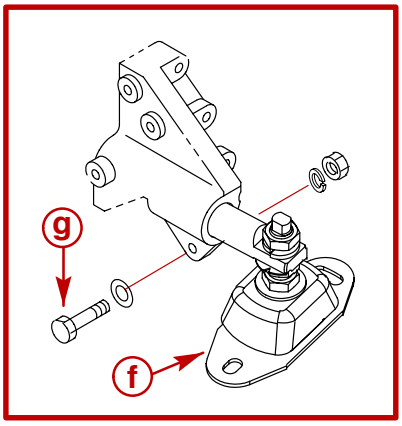

a - Starboard Mount Bracket
b - Rear Bracket
c - Mount To Cylinder Block Bolt And Washer
d - Bracket To Injection Pump Bolt And Washers
e - Bracket To Mount Bolt
f - Pedestal Mount
g - Trunion Clamping Bolt And Nut

Description		Nm	lb-in.	lb-ft
Bolt, Mount to Cylinder Block		51		37
Bolt, Bracket to Injection Pump		38		28
Bolt, Bracket to Mount		19		14
Bolt, Trunion Clamping		68		50

Port

1. Install the port engine mount bracket to the cylinder block.
2. Torque mount bolts.
3. Install pedestal mount assembly to trunion.
4. After trunion and mount are adjusted, torque trunion clamping bolt.

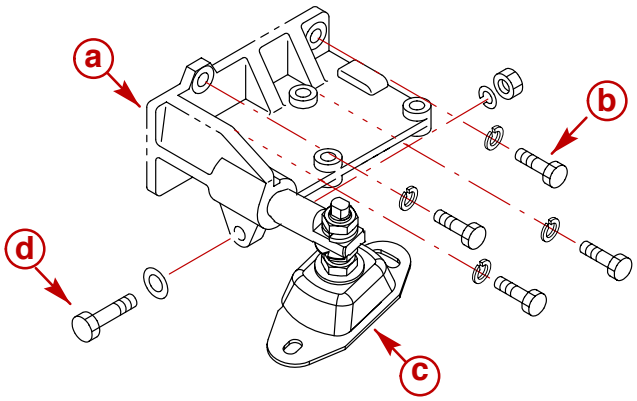

77775

a - Port Mount Bracket
b - Bolt And Lock Washer
c - Pedestal Mount Assembly
d - Trunion Clamping Bolt, Flat Washer, Lock Washer and Nut

Description		Nm	lb-in.	lb-ft
Bolt, Mount to Cylinder Block	M10 x 1.5	51		37
Bolt, Trunion Clamping		68		50

5. Attach coolant drain bracket to mount bracket. Torque bolts.

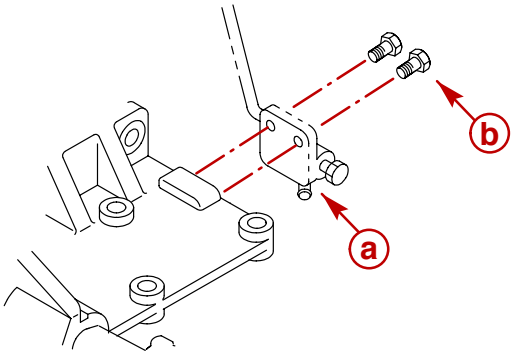

77774

a - Drain Bracket
b - Bolt

Description		Nm	lb-in.	lb-ft
Bolt, Drain Bracket	M8 x 1.25	24		18

PCV / Vent System

Refer to SECTION 7C - Turbocharger, for information.

Timing Belt And Related Components

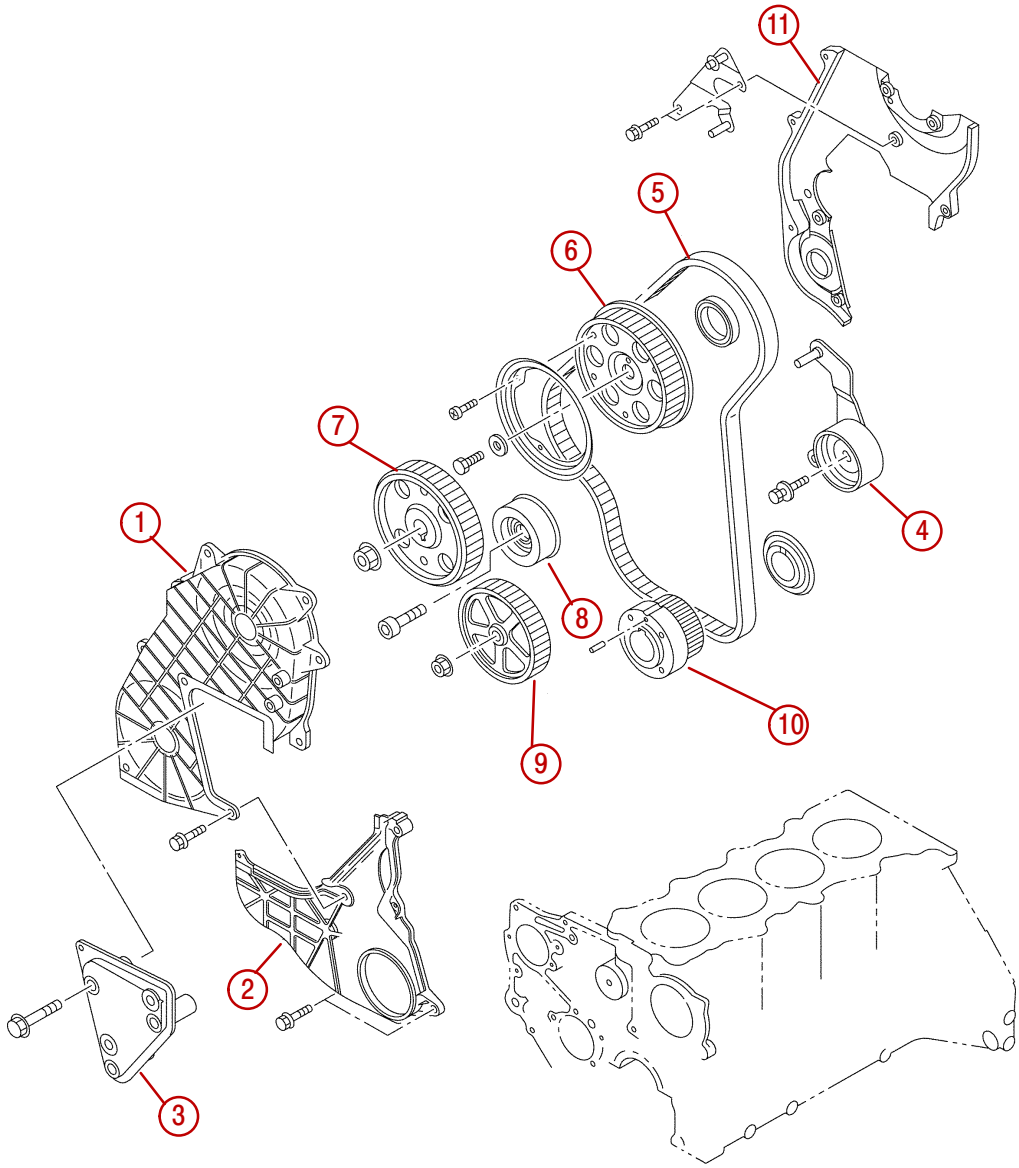

77151

1 - Upper Timing Cover
2 - Lower Timing Cover
3 - Engine Plate
4 - Tensioner Pulley Assembly
5 - Timing Belt
6 - Camshaft Pulley
7 - Injection Pump Pulley
8 - Idle Pulley
9 - Oil Pump Pulley
10 - Crankshaft Pulley
11 - Dust Cover

Removal

1. Remove engine drive belts.
2. Remove crankshaft pulley.
3. Remove water pump pulley.
4. Remove engine plate.
5. Remove upper timing belt cover.

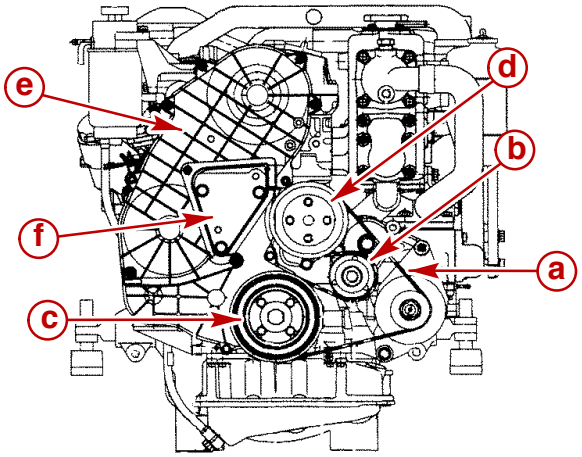

77121

a - Serpentine Belt
b - Belt Tensioner
c - Crankshaft Pulley
d - Water Pump Pulley
e - Upper Timing Belt Cover
f - Engine Plate

6. Reinstall bolt from engine plate for timing belt tensioner. Torque the bolt.

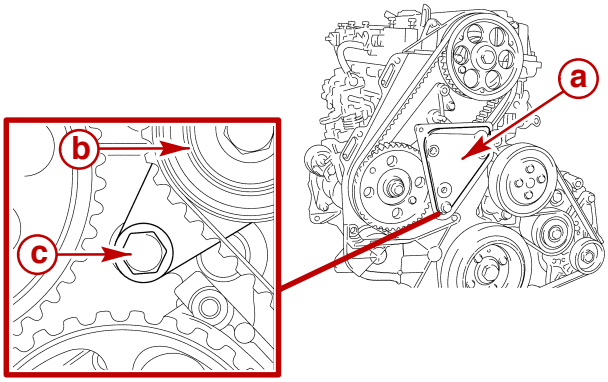

77127

a - Engine Plate
b - Timing Belt Tensioner
c - Bolt

Description		Nm	lb-in.	lb-ft
Bolt, Tensioner	M10 x 1.5	38		28

7. Remove lower timing belt cover.
8. Turn the crankshaft in direction of engine rotation until cylinder number 1 is on TDC. The pointer on the oil pump must align with the mark on the crankshaft pulley and exhaust camshaft pair of lobes for cylinder number 1 points upwards.

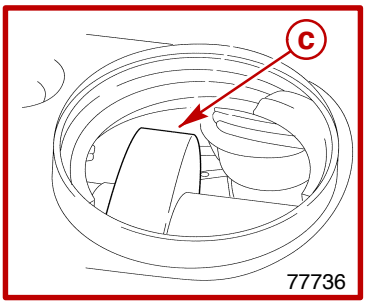

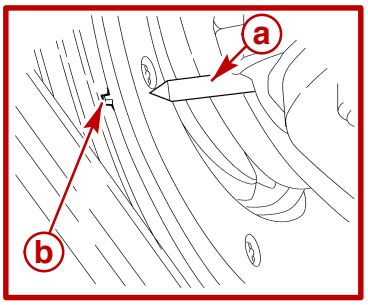

77737

a - Pointer
b - Mark
c - Exhaust Camshaft Pair Of Lobes For Cylinder Number 1

9. Install TDC alignment bolt in camshaft pulley
10. Install TDC alignment bolt in injection pump drive pulley.

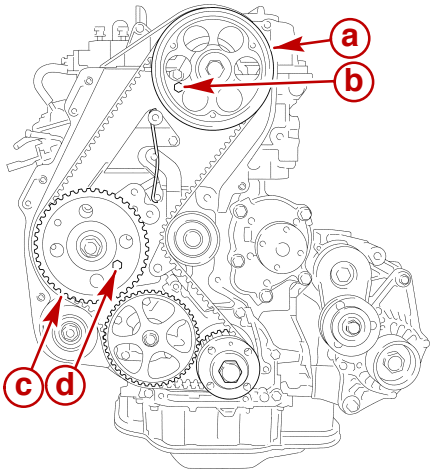

77129

a - Camshaft Pulley
b - TDC Alignment Bolt, M6
c - Injection Pump Pulley
d - TDC Alignment Bolt, M8

11. Loosen mounting bolts for timing belt tensioner pulley assembly. Remove tensioner spring and tensioner pulley assembly.

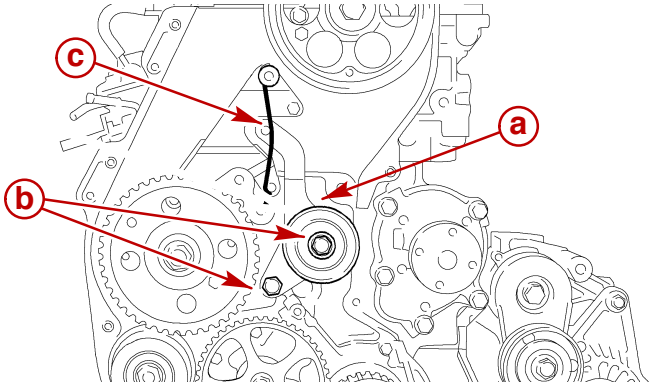

77152

a - Tensioner Pulley Assembly
b - Mounting Bolts
c - Tensioner Spring

12. Mark direction of the timing belt and remove timing belt.
13. With TDC alignment bolt in place, remove injection pump drive pulley retaining nut.

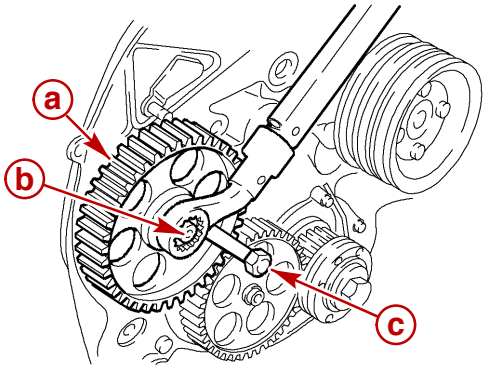

77299

a - Injection Pump Pulley
b - TDC Adjustment Bolt (M8)
c - Pulley Nut

14. Remove TDC alignment bolt. Remove injection pump drive pulley using special tool. Note woodruff key in shaft (hidden).

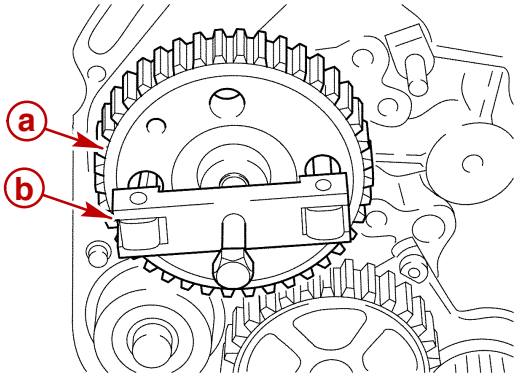

77156

a - Injection Pump Pulley
b - Special Tool

15. Remove pulley bolt and remove timing belt idler pulley.

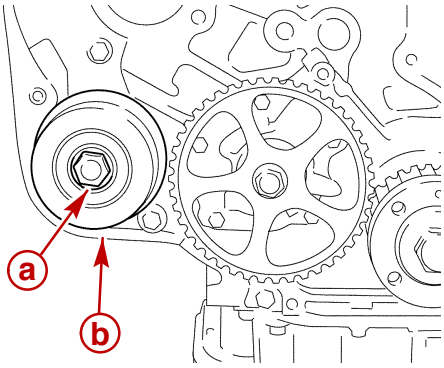

77153

a - Pulley Bolt
b - Idler Pulley

16. Remove the oil pump drive pulley. Counterhold using a separate wrench.

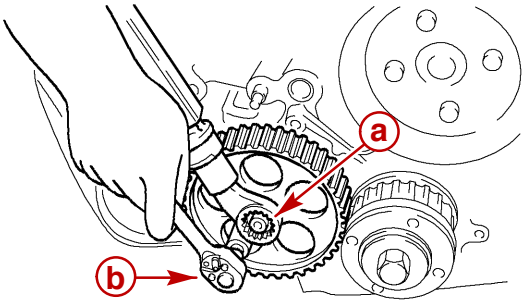

77159

a - Pulley Nut
b - Separate Wrench

17. Remove fastening bolt for timing belt drive pulley, counterhold using special tool.

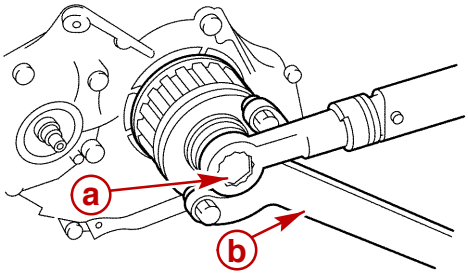

77140

a - Timing Belt Drive Pulley Bolt
b - Special Tool

18. Remove timing belt drive pulley from crankshaft using puller.

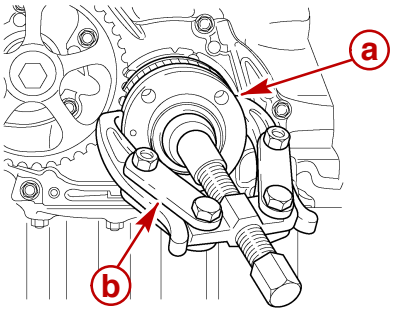

77141

a - Timing Belt Drive Pulley
b - Puller

19. Lock the camshaft pulley with TDC alignment bolt.
20. Remove pulley bolt from camshaft pulley.
21. Remove TDC alignment bolt and remove camshaft pulley.

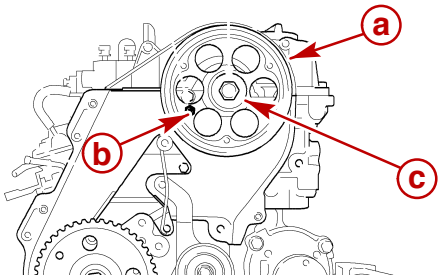

77152

a - Camshaft Pulley
b - TDC Alignment Bolt (M6)
c - Pulley Bolt

22. Loosen bolts and remove tensioner spring retainer plate.

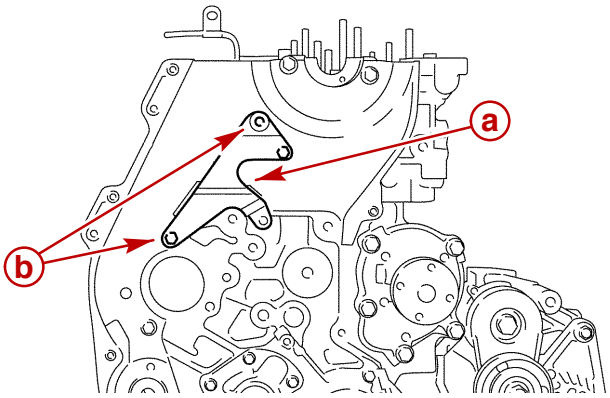

77157

a - Tensioner Spring Retainer Plate
b - Plate Bolts

23. Loosen bolts and remove dust cover.

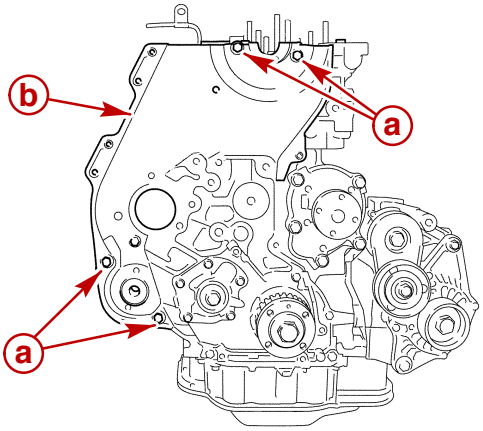

77157

a - Bolts
b - Dust Cover

Cleaning

1. Clean all parts with solvent and dry with compressed air.

Inspection

1. Inspect timing covers for warp, cracks and wear from belts and pulleys. Replace covers if worn or damaged.
2. Inspect pulleys and belts for wear or damage. Replace as necessary.

Installation

1. Install the front dust cover and tensioner spring retainer plate. Torque bolts.

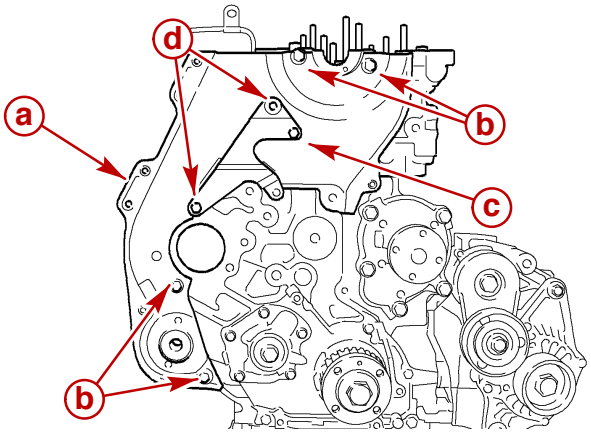

77294

a - Dust Cover
b - Cover Bolts
c - Tension Spring Retainer Plate
d - Plate Bolts

Description		Nm	lb-in.	lb-ft
Bolts, Front Dust Cover	M6 x 1.0	9.8	87	
Bolts, Tensioner Spring Retainer Plate	M6 x 1.0	9.8	87	

2. Install crankshaft timing belt pulley and parts in order. Concave side of belt guide flange MUST face the cylinder block.

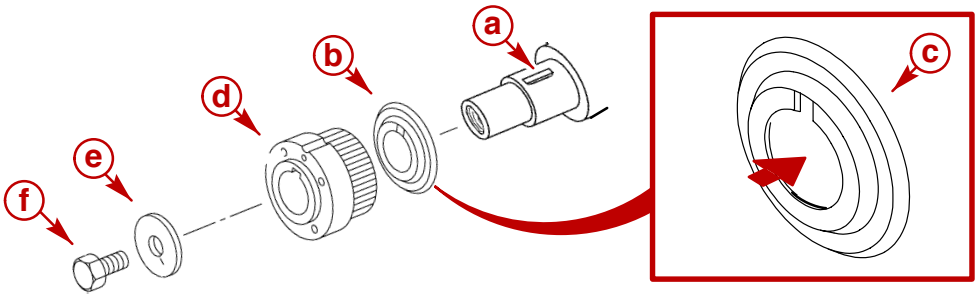

a - Woodruff Key
b - Belt Guide Flange
c - Concave Side
d - Crankshaft Timing Belt Pulley
e - Flat Washer
f - Bolt

3. Counterhold the crankshaft pulley using special tool and torque crankshaft pulley bolt.

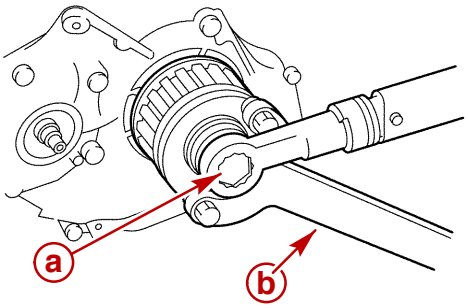

a - Pulley Bolt
b - Special Tool

Description		Nm	lb-in.	lb-ft
Bolt, Crankshaft	M16 x 1.5	196		144

4. Install oil pump pulley to oil pump shaft.

5. Install oil pump pulley nut. Counterhold pulley using a separate wrench. Torque nut.

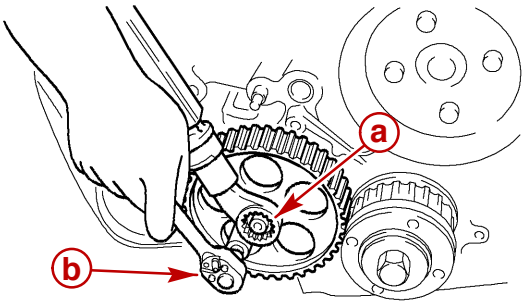

77159

a - Pulley Nut
b - Separate Wrench

Description		Nm	lb-in.	lb-ft
Nut, Oil Pump Pulley	M10 x 1.25	44		33

6. Install the idle pulley. Torque pulley bolt.

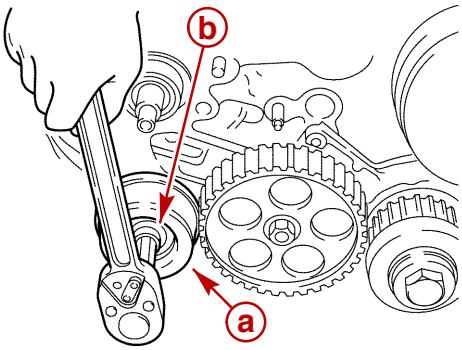

77298

a - Idle Pulley
b - Pulley Bolt

Description		Nm	lb-in.	lb-ft
Bolt, Idle Pulley	M12 x 1.25	80		59

7. Ensure that woodruff key is installed and install injection pump pulley.
8. Lock injection pump pulley using TDC alignment bolt.
9. Install and torque injection pump pulley nut.

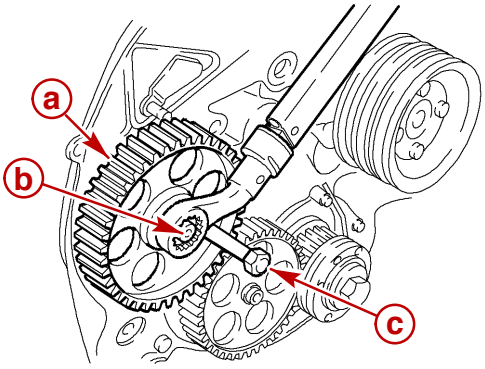

77299

a - Injection Pump Pulley
b - TDC Alignment Bolt (M8)
c - Injection Pump Pulley Bolt

Description		Nm	lb-in.	lb-ft
Nut, Injection Pump Pulley	M14 x 1.5	69		51

10. Ensure that woodruff key is installed and install camshaft pulley.
11. Install the camshaft pulley and lock the pulley with TDC alignment bolt.
12. Install and torque the camshaft pulley bolt.

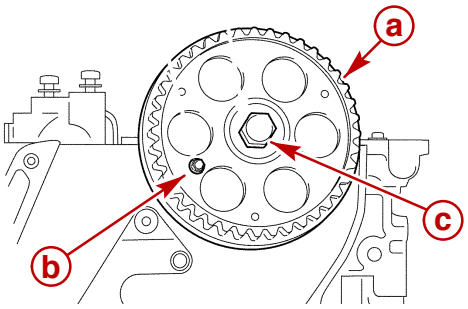

77300

a - Camshaft Pulley
b - TDC Alignment Bolt (M6)
c - Camshaft Pulley Bolt

Description		Nm	lb-in.	lb-ft
Bolt, Camshaft Pulley	M12 x 1.5	64		47

13. Install the tensioner pulley assembly. Temporarily hand-tighten mounting bolts.

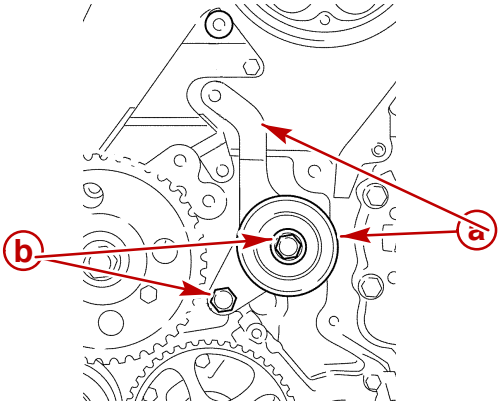

77152

a - Tension Pulley Assembly
b - Mounting Bolt

14. Note the direction of timing belt operation and install accordingly. Ensure that belt is taut between adjacent pulleys.

⚠ CAUTION

To ensure proper operation of engine systems, the timing belt must be taut from the crankshaft drive pulley around all other drive pulleys including the tension pulley.

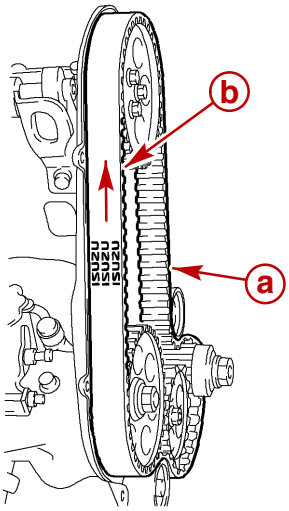

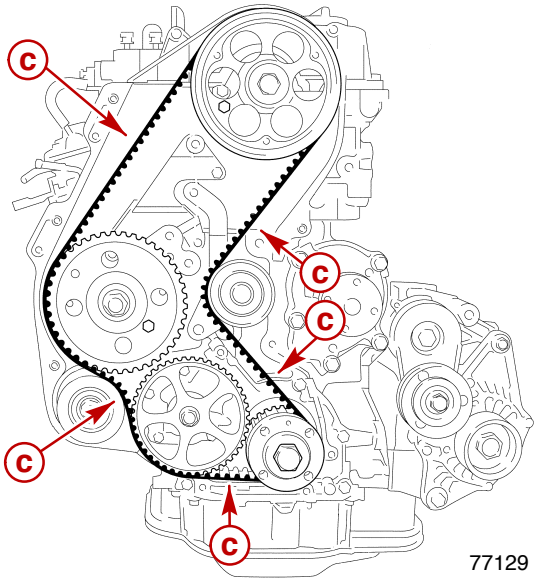

77129

a - Timing Belt
b - Direction Of Operation
c - Taut Belt Between Pulleys

15. Install tension spring. Ensure that tensioner pulley rests against belt under spring load.

NOTE: *Slightly loosen tensioner pulley bolts if necessary.*

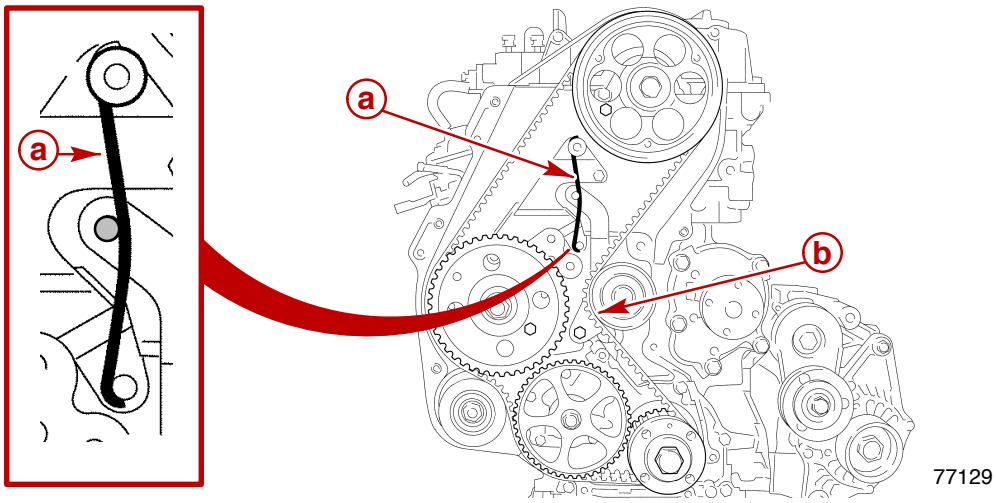

a - Tension Spring
b - Tension Pulley Load On Belt

16. Remove camshaft and injection pump TDC alignment bolts.
17. Torque tensioner pulley assembly upper mounting bolt. Temporarily hand-tighten lower bolt.

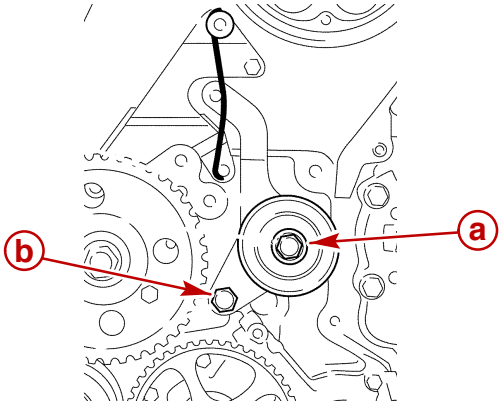

a - Upper Bolt
b - Lower Bolt

Description		Nm	lb-in.	lb-ft
Bolt, Tensioner Pulley Assembly	M10 x 1.5	38		28

18. Using the crankshaft drive pulley bolt, turn crankshaft approximately 780° in direction of engine rotation to cylinder number 1 TDC. Verify belt installation and timing.
19. Install the lower timing belt cover. Torque bolts.

Description		Nm	lb-in.	lb-ft
Bolt, Lower Timing Belt Cover	M6 x 1.0	9.8	87	

20. Remove and retain tensioner pulley assembly lower bolt.

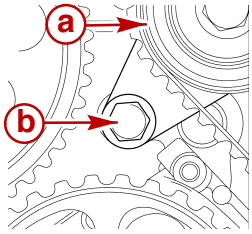

a - Tensioner Pulley
b - Lower Bolt

21. Install engine plate. Torque bolts, including tensioner pulley assembly lower bolt.
22. Install upper timing belt cover. Torque bolts.
23. Install the crankshaft damper pulley to the crankshaft timing belt drive pulley. Torque bolts.
24. Install water pump pulley. Torque bolts.
25. Install serpentine belt. Ensure that tensioner returns to initial position.

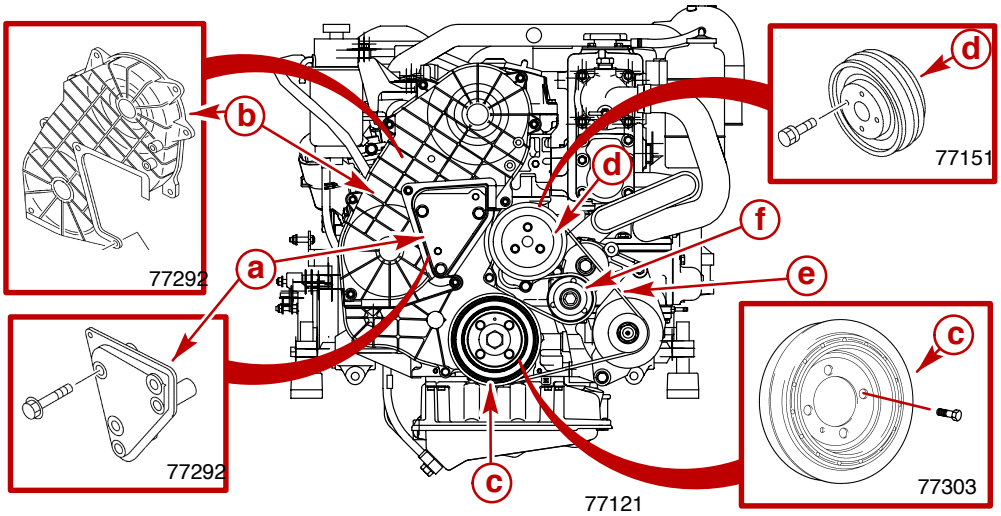

a - Engine Plate
b - Upper Timing Belt Cover
c - Crankshaft Damper Pulley
d - Water Pump Pulley
e - Serpentine Belt
f - Belt Tensioner

Description		Nm	lb-in.	lb-ft
Bolt, Engine Plate	M10 x 1.5	40		30
Bolt, Upper Timing Belt Cover	M6 x 1.0	9.8	87	
Bolt, Crankshaft Damper Pulley	M8 x 1.25	20		15
Bolt, Water Pump Pulley	M6 x1.0	9.8	87	

26. Install power steering belt, if equipped.
27. Pivot the power steering pump to adjust belt. Approximately 3/16 in. (5 mm) deflection should be measured at midpoint between the pulleys on the longest span.
28. Tighten mounting and tensioning bolts and nuts securely.

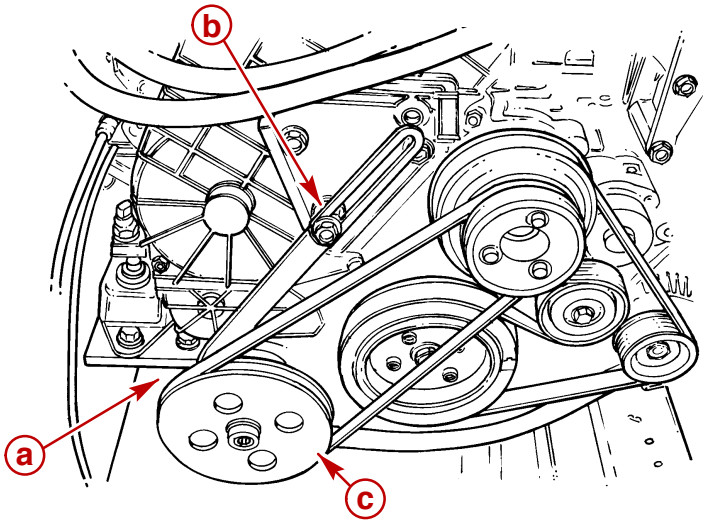

77321

a - Mounting Bolts (Hidden)
b - Tensioning Stud And Nut
c - Power Steering Pump / Pulley

THIS PAGE IS INTENTIONALLY BLANK

THIS PAGE IS INTENTIONALLY BLANK

ELECTRICAL SYSTEM

Section 4A - Starting System

Table of Contents

THIS PAGE IS INTENTIONALLY BLANK

Identification

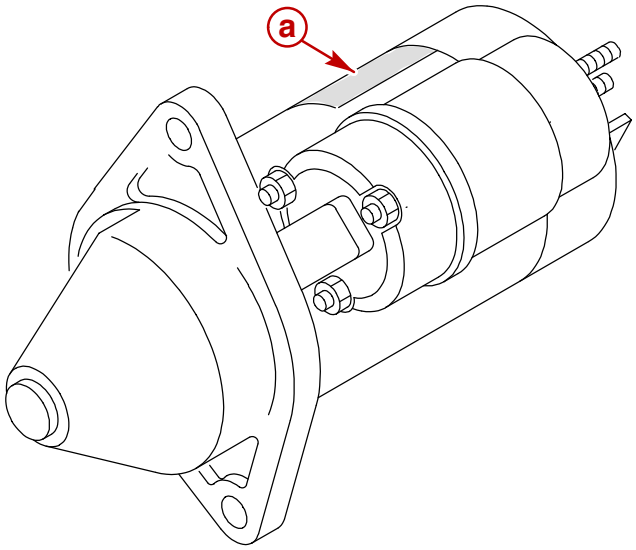

77371

a - I.D. Number On Starter

Replacement Parts

⚠ WARNING

Electrical system components on this engine are not external ignition protected. DO NOT STORE OR UTILIZE GASOLINE ON BOATS EQUIPPED WITH THESE ENGINES, UNLESS PROVISIONS HAVE BEEN MADE TO EXCLUDE GASOLINE VAPORS FROM ENGINE COMPARTMENT (REF: 33 CFR) Failure to comply could result in fire, explosion and/or severe personal injury.

Specifications

Description		Specification
Model		S114 - 829A
Output		1.4 kW
Voltage		12 V
Limit Of Continual Use (Sec)		30 Sec
Rotating Direction (View From Pinion Side)		Right
Pinion Teeth		13
No Load Test	Terminal Voltage Current RPM	11 V Less Than 90 A More Than 2700
Load Test	Terminal Voltage Current RPM	8.4 V 250 A More Than 1000
Minimum Brush Length		10.5 mm
Commutator Diameter	Production	29.00 mm
	Service	28.00 mm
Gear Case Bushing	Production	12.48 mm
	Service	12.59 mm
Pinion Shaft Bushing	Production	6.75 mm
	Service	6.87 mm
Center Bracket Bushing	Production	18.05 mm
	Service	18.16 mm
Rear Cover Bushing	Production	12.02 mm
	Service	12.13 mm

Torque

Description		Nm	lb-in.	lb-ft
Nut, Solenoid	M5	2.4	21	
Nut, Positive Terminal	M8	6.7	59	
Nut, Field Wire Terminal	M8	6.7	59	
Screw, Solenoid		5.7	50	
Bolt, Special Lower Mounting	M10 x 1.25	38		28
Bolt, Starter Motor To Block	M10 x 1.25	38		28
Bolt Shift and Electrical Bracket	M8 x 1.25	19	168	
	M10 x 1.5	38		28

Lubricants / Sealants / Adhesives

Description	Where Used	Method of Use	Part Number
Liquid Neoprene	Exposed terminals and connections	Light coating on surfaces	92-25711--3
2-4-C Marine Lubricant with Teflon	Mounting surfaces, fasteners and pinion	Light coating on surfaces	92-802861Q1

Battery

General Information

⚠ WARNING

DO NOT use jumper cables and a booster battery to start engine. Do NOT recharge a weak battery in the boat. Remove battery and recharge in a well ventilated area away from fuel vapors, sparks or flames.

⚠ WARNING

Batteries contain acid which can cause severe burns. Avoid contact with skin, eyes and clothing. Batteries also produce hydrogen and oxygen gases when being charged. This explosive gas escapes fill/vent caps and may form an explosive atmosphere around the battery for several hours after it has been charged; sparks or flames can ignite the gas and cause an explosion which may shatter the battery and could cause blindness or other serious injury.

Safety glasses and rubber gloves are recommended when handling batteries or filling electrolyte. Hydrogen gases that escape from the battery during charging are explosive. When charging batteries, be sure battery compartment or area where batteries are located, is well vented. Battery electrolyte is a corrosive acid and should be handled with care. If electrolyte is spilled or splashed on any part of the body, immediately flush the exposed area with liberal amounts of water and obtain medical aid as soon as possible.

⚠ CAUTION

To prevent damage to the electrical system be sure to adhere to the following:

- **When installing battery, be sure to connect the positive (+) battery cable to positive (+) battery terminal first and then the negative (–) battery cable to negative (–) battery terminal.**
- **Never disconnect the battery cables while the engine is running.**
- **If a charger or booster is to be used, be sure to connect it in parallel with existing battery (positive to positive and negative to negative).**
- **When applying a booster charge to battery, disconnect both cables from battery (to prevent damage to voltage regulator).**
- **Check battery condition periodically.**
- **Make sure that battery leads are kept clean and tight.**

Battery Selection

IMPORTANT: Engine electrical system is negative (–) ground. It is recommended (required in some states) that the battery be installed in an enclosed case. Refer to regulations for your area.

1. Select a battery that meets all of the following specifications:
   a. 12-volt marine type.
   b. Tapered post connectors or side terminal connectors. Do not use a battery with wing nut connectors.
   c. Battery capacity rating of at least:

Engine (cylinder / type)	CID (L)	Minimum Required Cranking Battery Size
4 / Inline	1.7	515 cca / 652 mca / 65 Ah

2. Connect battery cables to battery by FIRST installing positive (+) battery cable end on positive (+) battery terminal. Tighten clamp securely. THEN install negative (–) battery cable end on negative (–) battery terminal. Tighten clamp securely.

Battery Cables

IMPORTANT: Boating industry standards (BIA, ABYC), federal standards and Coast Guard regulations must be adhered to when installing or replacing battery or cables. Be sure battery cable installation meets the pull test requirements and that positive battery terminal is properly insulated in accordance with regulations.

Select proper size positive (+) and negative (–) battery cables. Battery should be located as close to engine as possible.

IMPORTANT: Terminals must be soldered to cable ends to ensure good electrical contact. Use electrical grade (resin flux) solder only. Do not use acid flux solder, it may cause corrosion and a subsequent failure.

Battery Cable Length	Minimum Cable Gauge
0.9 m (Up to 3 ft)	35 mm^2 (2)
0.9 - 1.1 m (3 - 3-3/4 ft)	50 mm^2 (1)
1.1 - 1.4 m (3-3/4 - 4-3/4 ft)	50 mm^2 (0)
1.4 - 1.8 m (4-3/4 - 6 ft)	70 mm^2 (0)
1.8 - 2.3 m (6 - 7-1/2 ft)	95 mm^2 (00)
2.3 - 2.9 m (7-1/2 - 9-1/2 ft)	120 mm^2 (000)
2.9 - 3.7 m (9-1/2 - 12 ft)	▲ 70 mm^2 (00)
3.7 - 4.6 m (12 - 15 ft)	▲ 95 mm^2 (000)
4.6 - 5.8 m (15 - 19 ft)	▲ 120 mm^2 (000)
▲ :Two cables of specified gauge required for positive and two required for negative.	

Maintenance

⚠ WARNING

Always disconnect battery cables from battery before working around electrical system components to prevent injury to yourself or damage to electrical system.

1. Inspect wiring for frayed and worn insulation.
2. Inspect terminals for corrosion and loose connections.

Storage

1. Remove battery and clean exterior.
2. Check fluid level and fill if low.
3. Cover terminals and bolts with light coat of grease.
4. Set battery on wood or in carton, store in cool, dry place.
5. Check every 20 days for fluid level and slow charge.

IMPORTANT: A discharged battery can be damaged by freezing.

Starter Relay

Identification

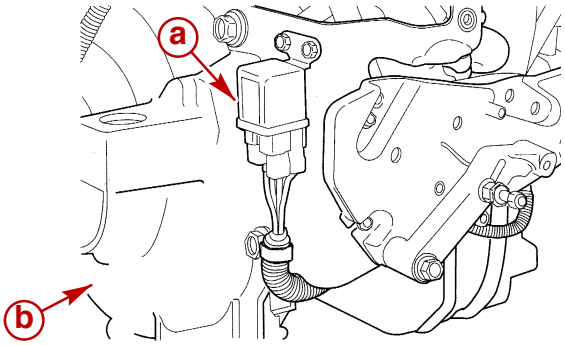

77345

a - Starter Relay
b - Flywheel Housing

Testing / Replacement

1. Disconnect battery cables from battery.
2. Remove relay.
3. Connect 12 volt battery with jumper leads as shown.
4. Using a continuity meter, connect test leads as shown.

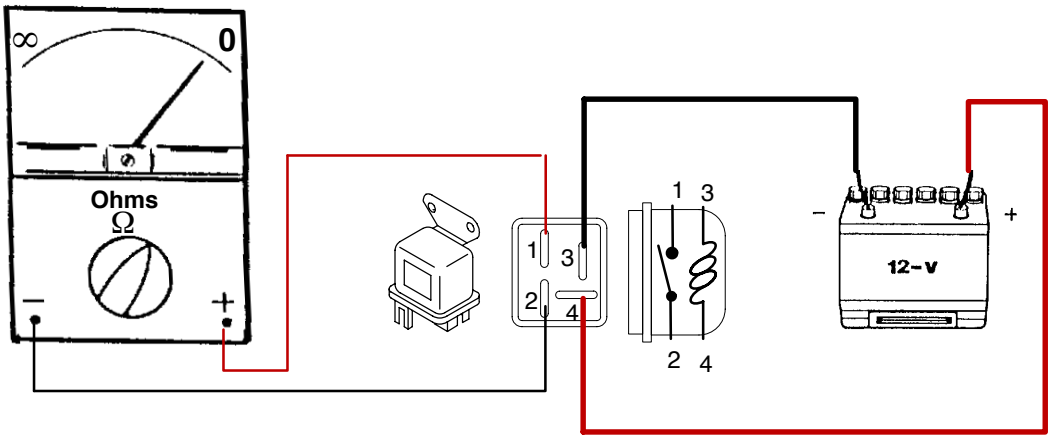

77305 72630

Testing Starter Relay

5. If no continuity is present, replace relay.
6. If meter shows movement, check engine or instrument wiring for short circuit.
7. Connect battery cables.

Starter Motor

Testing Voltage

Always test the voltage at the starter motor to ensure a minimum of 9.5 volts during cranking.

IMPORTANT: Voltage below 9.5 causes excessive heat build up, which can damage the starter motor and weld the starter solenoid contacts together.

1. Ensure that battery is fully charged.
2. Connect voltmeter positive (+) lead to the terminal on the starter solenoid.
3. Connect voltmeter negative (–) lead to the starter motor case. Ensure that there is good metal contact to prevent a false voltage reading.
4. Crank engine for 10 seconds and record voltmeter reading.
5. A reading of 9.5 volts or more verifies starter motor is getting sufficient voltage.

NOTE: *If the starter is getting at least 9.5 volts and the engine is not cranking properly, remove the glow plugs or hole plugs and try turning the engine over by hand. If the engine turns over freely by hand, the starter motor could have a problem.*

6. A reading below 9.5 volts suggests a voltage loss between the battery and the starter. Refer to Testing Voltage Drop.

Testing Voltage Drop

This test should be done anytime a voltage drop is suspected.

1. Ensure battery is fully charged.
1. Connect voltmeter positive (+) lead to battery positive (+) post.
2. Connect voltmeter negative (–) lead to starter solenoid terminal where the positive (+) battery cable connects.

NOTE: *Connect voltmeter leads to the battery post, NOT the battery cable end.*

IMPORTANT: Remove one voltmeter lead before starter motor stop cranking in the following steps to prevent the possibility of voltmeter damage.

3. Crank the engine and record voltmeter reading. The reading should not exceed .5 volts. A reading over .5 volts suggests excessive resistance.
4. Test the negative (–) battery cable by connecting the voltmeter negative (–) lead to the battery negative (–) post.
5. Connect the voltmeter positive (+) lead to the starter motor case. Ensure that there is good contact with metal.
6. Repeat step 3.
7. If either reading was above .5 volts, start with the battery cable and work toward the starter checking each connection for resistance.

NOTE: *Always ensure that paint or corrosion is not causing the high resistance. The mounting surface under the starter motor and the mounting bolts should be free from paint and corrosion.*

Inspection

Starter motor with solenoid is completely enclosed when mounted to the drive housing to prevent entrance of moisture and dirt. However, periodic inspection is required.

1. Inspect terminals for corrosion and loose connections.
2. Inspect wiring for frayed and worn insulation.
3. Ensure that mounting nuts are tight.
4. Ensure that mounting surfaces under the starter motor and the mounting bolts are free of paint and corrosion. Treat with lubricant to prevent corrosion.

Starting System Components

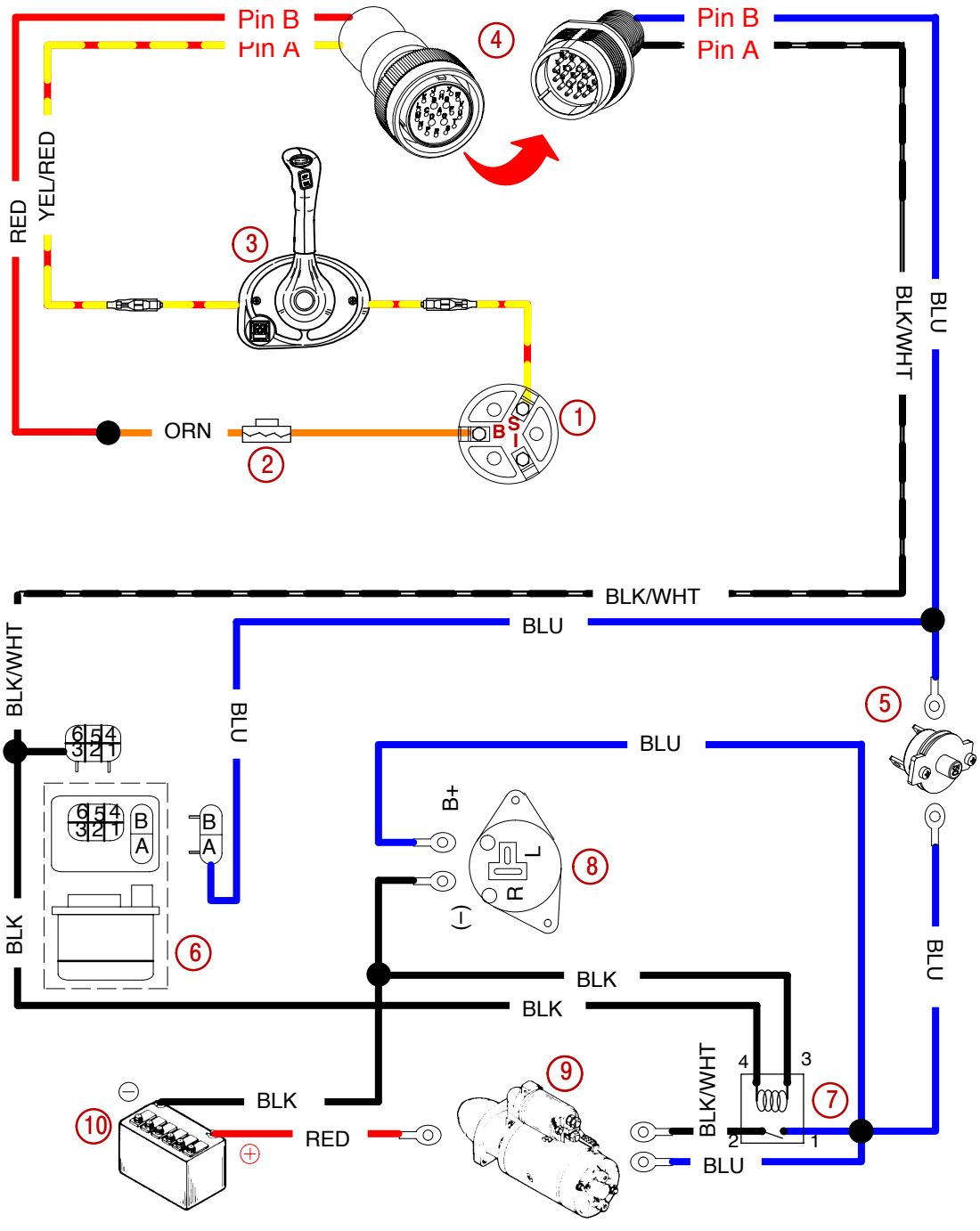

1 - Ignition Switch Shown (Some Models Are Start Switch Only)
2 - 20 Ampere Fuse
3 - Remote Control Neutral Safety Switch
4 - Instrument/ Extension Harness Connectors
5 - Circuit Breaker
6 - Glow Plug Controller
7 - Starter Relay
8 - Alternator
9 - Starter
10 - Battery

Starter Removal

⚠ WARNING

Always disconnect battery cables from battery before working around electrical system components to prevent injury to yourself or damage to electrical system.

1. Disconnect battery cables from battery.
2. Remove shift and electrical bracket.

NOTE: *One bracket bolt is threaded into upper starter flange.*

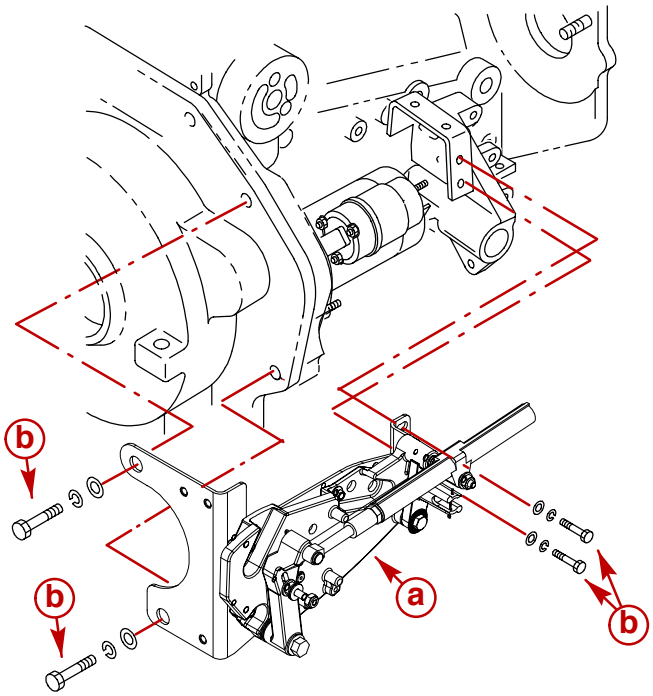

77766

a - Shift And Electrical Bracket
b - Bolt And Washers

3. Disconnect wires from starter.
4. Remove any ground (–) wires from special lower mounting bolt.
5. Remove special lower mounting bolt.
6. Remove starter motor.

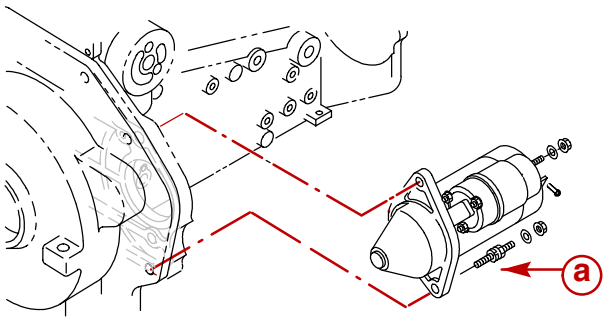

77377

a - Special Lower Mounting Bolt

Solenoid Switch

Removal

1. Remove nut from the field wire on the solenoid.

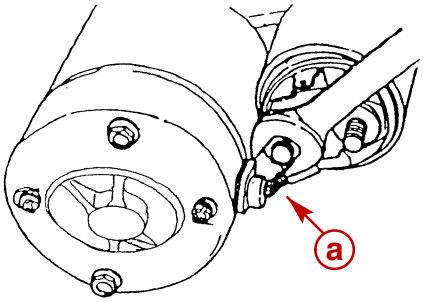

77373

a - Field Wire Nut

2. Remove nuts from solenoid.
3. Slide solenoid plunger off shift fork.
4. Remove solenoid from starter assembly.

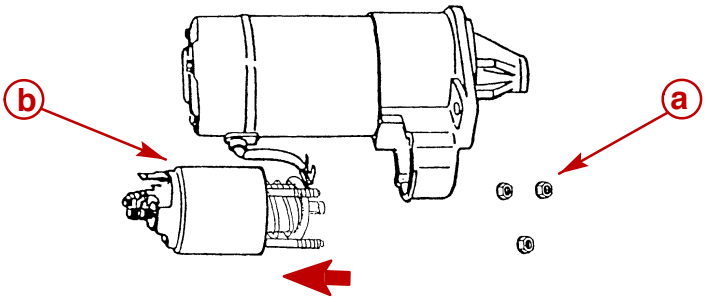

77374

a - Nuts
b - Solenoid

Test Solenoid Wiring

1. With a continuity tester, place one lead on the S terminal and the other lead on the solenoid body.
2. If there is no continuity, replace solenoid.

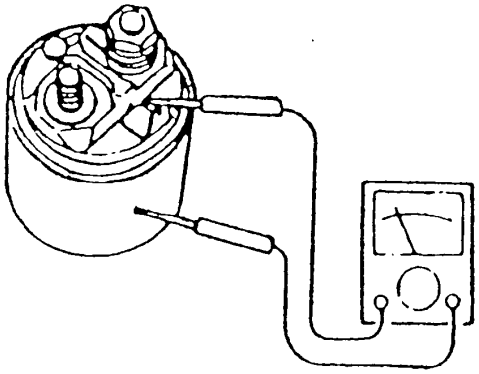

77375

Test Solenoid Continuity

1. With a continuity tester, place one lead on the S terminal and the other lead on the M terminal.
2. If there is no continuity, replace the solenoid.

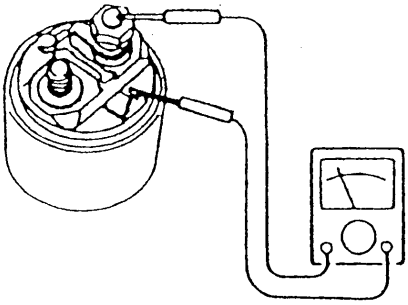

77376

Test Solenoid Switch

1. Place plunger on bench and push down on solenoid until plunger contacts solenoid body. Use a circuit tester to inspect the solenoid switch continuity.
2. With a continuity tester, place one lead on B terminal and the other lead on M terminal.
3. If there is no continuity, replace the solenoid.

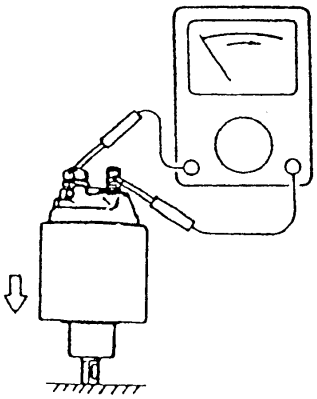

77378

Assembly

1. Apply a light coat of 2-4-C Marine Lubricant with Teflon to the shift lever and sliding portion on the pinion.

Description	Where Used	Method of Use	Part Number
2-4-C Marine Lubricant with Teflon	Mounting surfaces, fasteners and pinion	Light coating on surfaces	92-802861Q1

IMPORTANT: Make sure yoke is free of debris and metallic particles when reassembled.

2. Slide solenoid plunger onto shift fork.
3. Install nuts on solenoid and torque.
4. Install nut on the field wire terminal and torque.

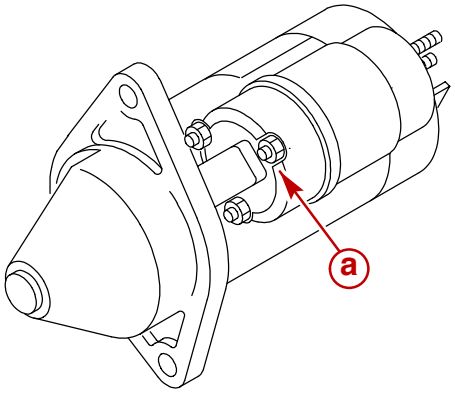

77371

a - Solenoid Nut

Description		Nm	lb-in.	lb-ft
Nut, Solenoid	M5	2.4	21	
Nut, Field Wire Terminal	M8	6.7	59	

Starter Installation

1. Apply a light coat of 2-4-C Marine Lubricant with Teflon to mounting surfaces, fasteners and pinion prior to installation.
2. Position starter motor on engine.
3. Install special lower mounting bolt. Temporarily hand tighten only.
4. Install shift and electrical bracket.
5. Torque starter and shift and electrical bracket bolts.

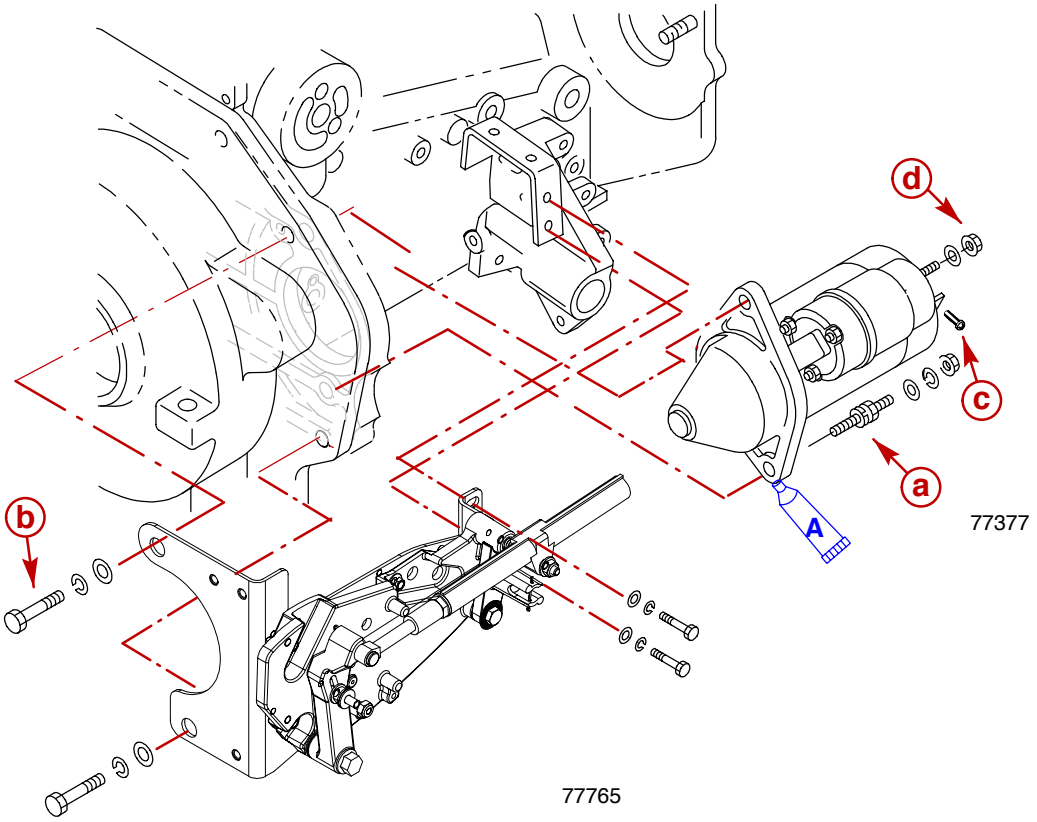

a - Special Lower Mounting Bolt
b - Shift and Electrical Bracket Bolt
c - Shift and Electrical Bracket Bolt
d - Solenoid Screw
e - Positive (+) Terminal Nut

	Description	Where Used	Method of Use	Part Number
A	2-4-C Marine Lubricant with Teflon	Mounting surfaces, fasteners and pinion	Coat surfaces	92-802861Q1

Description		Nm	lb-in.	lb-ft
Bolt, Special Lower Mounting	M10 x 1.25	38		28
Bolt, Shift and Electrical Bracket	M10 x 1.5	38		28
	M8 x 1.25	19	168	28

6. Connect wires to starter solenoid. Observe the following:
   a. Ensure that grounding stud and starter solenoid terminal are free of paint or any other material that could cause a poor electrical connection.
   b. Ensure that positive battery cable is inserted through the protective rubber boot before attachment with positive terminal nut.
   c. After battery cables and wires are connected, apply a thin coat of liquid neoprene to the terminals.
   d. Be sure to slide rubber boot over positive (+) terminal and solenoid wire after connection.

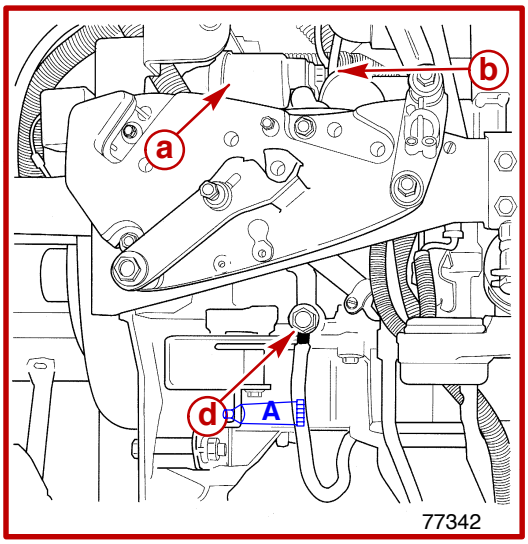

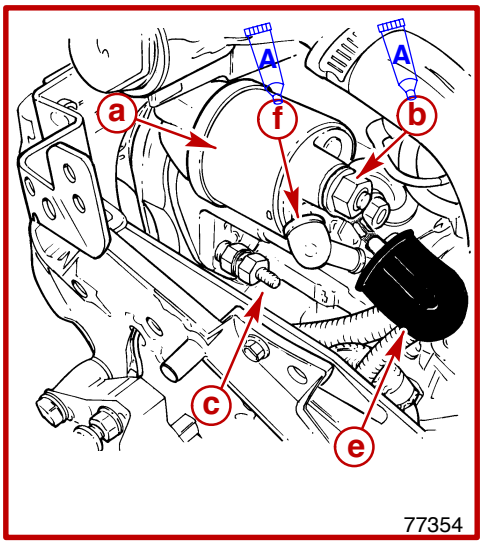

a - Starter Solenoid
b - Positive Terminal Nut
c - Special Lower Mounting Bolt (Negative Battery Cable And Grounds)
d - Optional Negative (–) Battery Cable Location
e - Protective Rubber Boot
f - Solenoid Screw (BLACK/WHITE Solenoid Wire)

Description		Where Used	Method of Use	Part Number
A	Liquid Neoprene	Exposed terminals and connections	Light coating on surfaces	92-25711--3

Description		Nm	lb-in.	lb-ft
Nut, Positive Terminal	M8	6.7	59	
Screw, Solenoid		5.7	50	

7. Install ground (–) wires onto special lower mounting bolt. Tighten nut securely.
8. Connect battery cables to battery.

THIS PAGE IS INTENTIONALLY BLANK

ELECTRICAL SYSTEM

Section 4B - Charging System

Table of Contents

THIS PAGE IS INTENTIONALLY BLANK

Identification

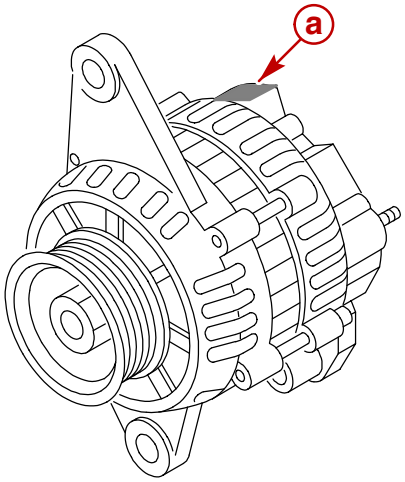

77398

a - Identification Plate Location

Replacement Parts Warning

⚠ WARNING

Electrical, ignition and fuel system components on your Mercury MerCruiser are designed and manufactured to comply with U.S. Coast Guard Rules and Regulations to minimize risks of fire and explosion.

Use of replacement electrical, ignition or fuel system components, which do not comply with these rules and regulations, could result in a fire or explosion hazard and should be avoided.

Specifications

Description		Specification
Rated output		12 V - 50 A
Output characteristic (Hot operating)	Volts	13.5 V
	Current	33 A Min.
	Speed	2500 rpm
Brush	Length	18.5 mm (0.72 in.)
Regulator regulated voltage (at 20° C)		14.3 - 15.0 V
Rotational direction (viewed from pulley)		Clockwise
Belt Tension		Automatic Tensioner

Torque Specifications

Description		Nm	lb-in.	lb-ft
Bolt, Tensioner Pulley		50		37
Nut, Alternator	M10 x 1.25	46		34
Bolt, Bracket	M10 x 1.5	48		35
Bolt, Bracket	M14 x 2.0	68		50
Bolt, Alternator-To-Bracket	M8 x 1.25	19	168	
Nut, Lower Mounting Bolt	M10 x 1.25	46		34
Nut, Alternator Pulley		99-137		73-101
Nut, Terminal B + [1]		5-8.5	44-75	

[1] Do NOT overtighten. Overtightening may damage the insulating bushing.

Tools

Description	Part Number
Multi-Meter / DVA Tester	91-99750A1
Ammeter (0-100 Amp)	Obtain Locally

Lubricants / Sealants / Adhesives

Description	Where Used	Method of Use	Part Number
Liquid Neoprene	Exposed terminals and connections	Light coating on surfaces	92-25711--3

Precautions

⚠ CAUTION

The following precautions MUST BE observed when working on the charging system. Failure to observe these precautions may result in serious damage to the alternator or charging system.

- **DO NOT attempt to polarize the alternator.**
- **DO NOT short across or ground any of the terminals on the alternator, except as specifically instructed in the Troubleshooting Tests.**
- **NEVER disconnect the alternator output lead or battery cables when the alternator is operating**
- **NEVER disconnect regulator lead from alternator regulator terminal when the alternator is operating.**
- **ALWAYS remove negative (–) battery cable from battery before working on the charging system.**
- **When installing battery, BE SURE to connect battery cables to battery by FIRST installing positive (+) battery cable end on positive (+) battery terminal. Tighten clamp securely. THEN install negative (-) battery cable end on negative (-) battery terminal. Tighten clamp securely**
- **If a charger or booster battery is to be used, BE SURE to connect it in parallel with existing battery (positive to positive; negative to negative).**

Charging System Components

Alternator

The main components of the alternator are the rotor, stator, rectifier assembly, front bracket, rear bracket, brushes, Integrated Circuit (IC) regulator, bearings and pulley.

This alternator has three terminals: terminal B (DC power output terminal), terminal L and terminal R. Since the terminal L is connected to the field coil, it is an input terminal of initial excitation current together with the terminal R, until the alternator begins to generate output. Also, it has another function as a voltage output terminal (the current output capacity is only one ampere).When the terminal L voltage reaches battery voltage it turns the indicator lamp off.

Alternator Circuit Diagram

The charging system consists of an IC regulator built in the alternator, a battery, a warning lamp, the ignition switch and connecting wires.

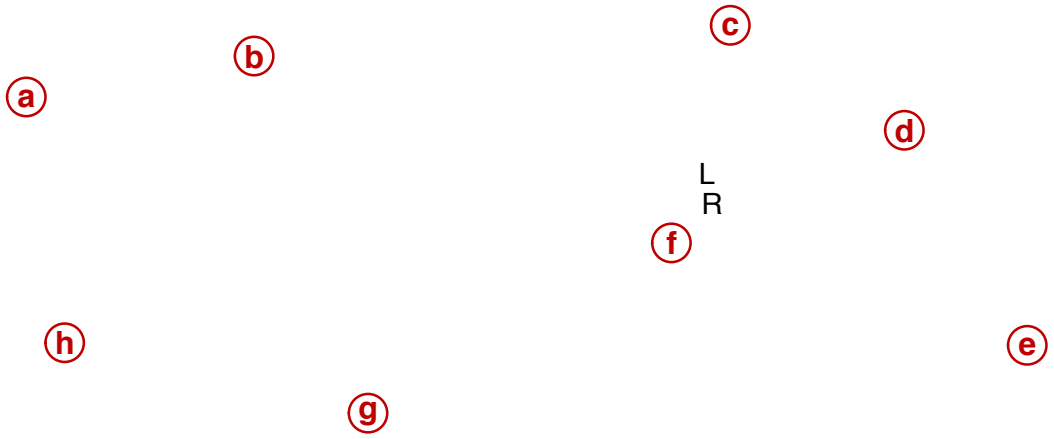

a - Stator Coil
b - Diode Trio
c - Charge Indicator Warning Lamp
d - Key Switch
e - Battery (12V)
f - Two Way Connector Receptacle
g - IC Regulator
h - Field Coil

Battery Isolator Diagram

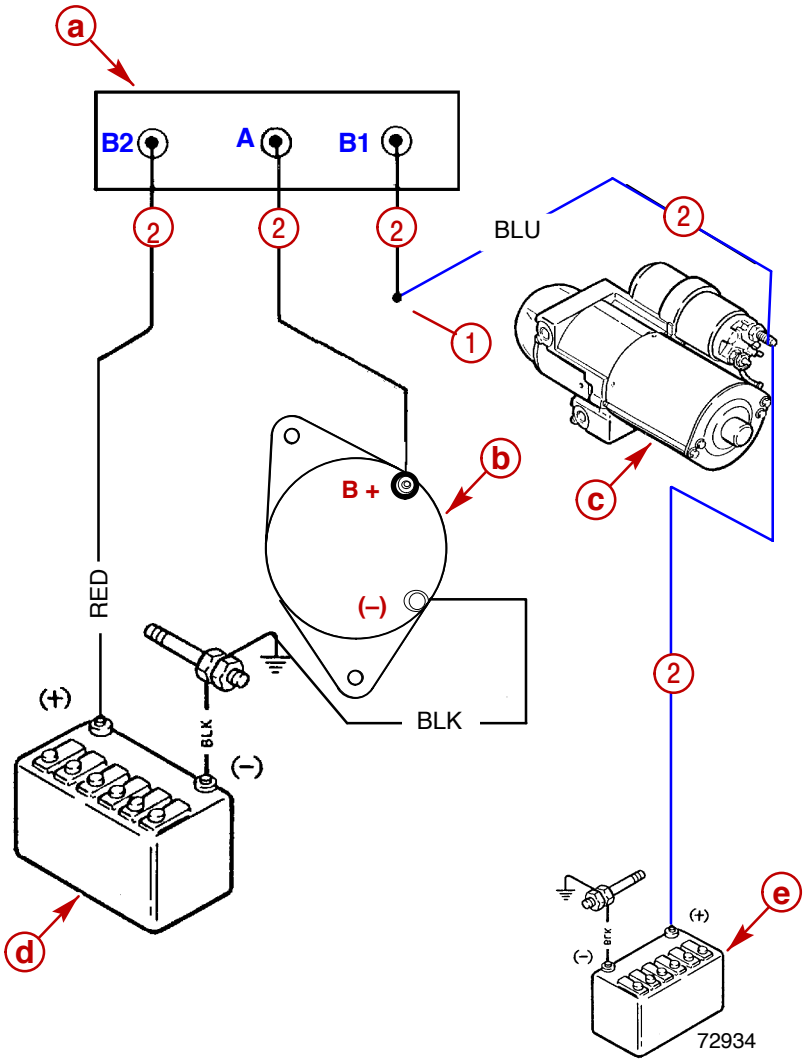

Typical Alternator

- **a** - Isolator
- **b** - Alternator
- **c** - Starter
- **d** - Cranking Battery
- **e** - Auxiliary Battery
- **1** - BLUE Wire From Alternator Battery Terminal. Sufficient Gauge Wire Spliced To Connect As Shown.
- **2** - 8 Gauge Minimum

Exploded View

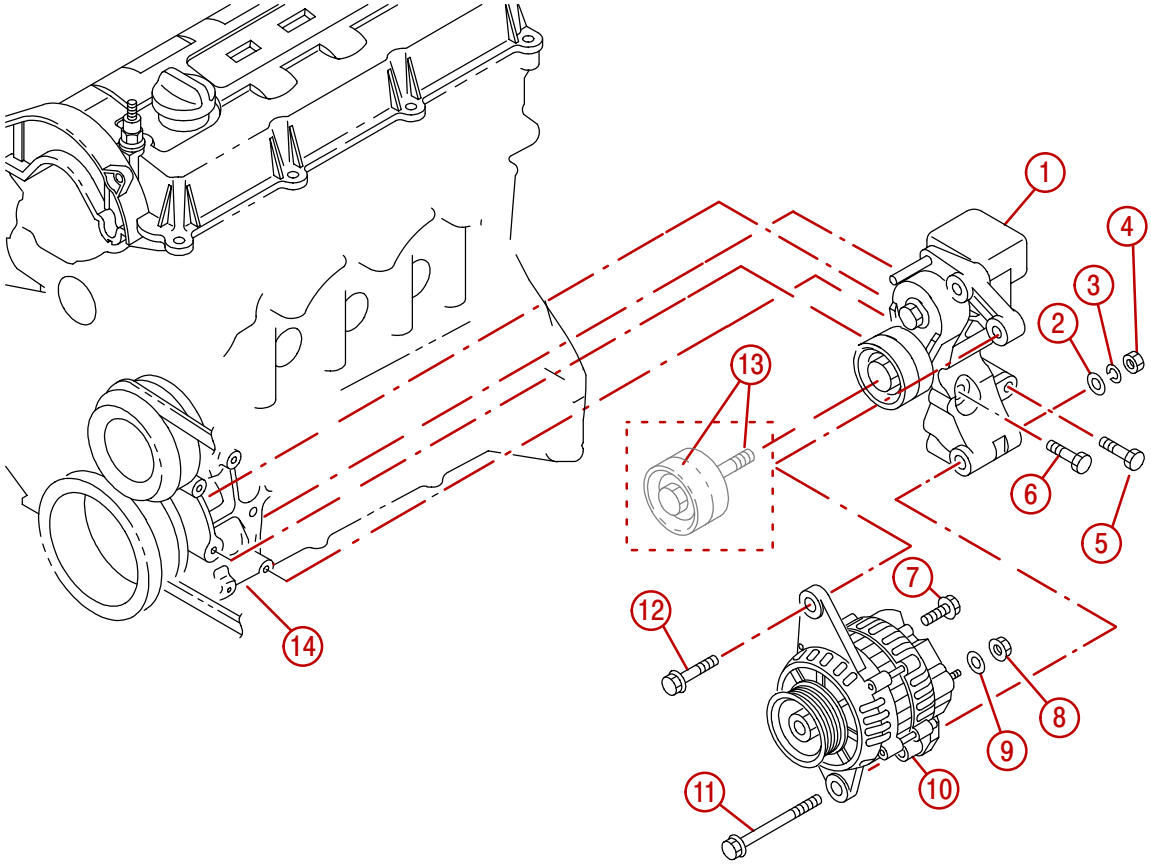

77398

1 - Alternator Bracket
2 - Flat Washer
3 - Lock Washer
4 - Mounting Nut
5 - Bracket Bolt, M10 (2)
6 - Bracket Bolt, M14 (2)
7 - Ground Terminal Bolt
8 - Split-Lock Washer
9 - Battery Post (B +) Nut
10 - Alternator
11 - Lower Mounting Bolt
12 - Alternator-To-Bracket Bolt
13 - Automatic Tensioner Pulley And Bolt
14 - Cylinder Block

Serpentine Drive Belt

Removal / Installation / Adjustment

NOTE: *On some engines it may be necessary to remove other drive belts to gain access to a particular belt during replacement. Refer to appropriate sections for information concerning individual drive belts and proceed accordingly.*

1. Move automatic tensioner pulley in direction of arrow. Position a suitable tool on pulley fastener and rotate.

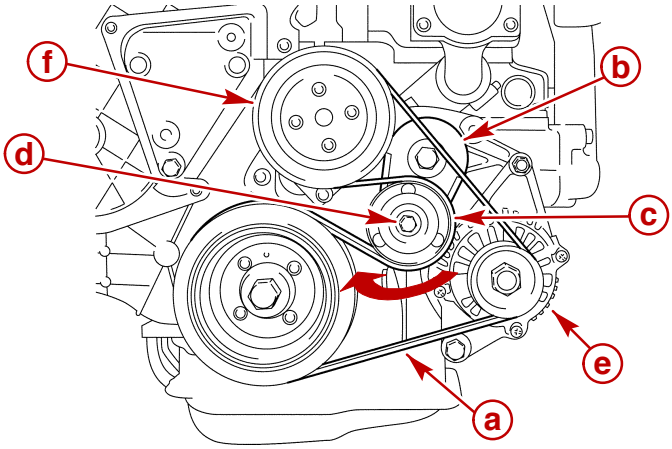

77139

Typical

- **a** - Serpentine Belt
- **b** - Automatic Tensioner
- **c** - Pulley
- **d** - Pulley Fastener
- **e** - Alternator
- **f** - Water Pump

2. Remove old belt.
3. Install new serpentine belt. Follow direction of rotation, if indicated on belt.
4. Release pulley and allow tensioner to glide back slowly. Tensioner must return to initial position.
5. Ensure that belt is positioned properly on pulleys.

Alternator

Removal

⚠ WARNING

Always disconnect battery cables from battery before working around electrical system components to prevent injury to yourself or damage to electrical system.

1. Disconnect battery cables from battery.
2. Disconnect wiring from alternator.
3. Remove engine belts.
4. Remove alternator mounting bolts and nut.
5. Remove alternator from bracket.

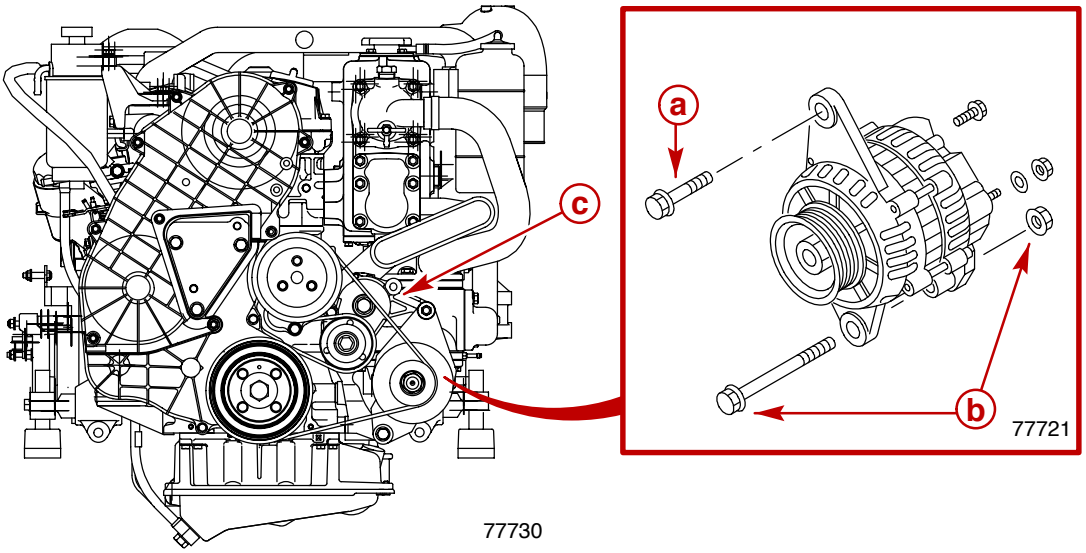

a - Alternator-To-Bracket Bolt
b - Lower Mounting Bolt And Nut
c - Bracket

Testing

Troubleshooting Alternator on Engine

Use the following tests in conjunction with SECTION 1 - Troubleshooting. Before proceeding with the tests, perform the following checks to eliminate possible problem areas. Also observe Precautions to prevent damage to alternator system.

1. Ensure that battery is fully charged. An undercharged battery can be caused by excessive current draw from accessories or by operating the engine at low speeds for extended periods.
2. Check physical condition. Battery MUST BE at least 75% (1.230 specific gravity) of full charge to obtain valid results in the following tests. If not, charge battery before testing system.
3. Inspect entire charging system wiring for defects. Ensure all connections are secure and clean.
4. Check alternator drive belt for excessive wear, cracks, fraying and glazed surfaces. Replace if necessary.
5. Check drive belt tension and adjust if necessary.

Charging System

1. Check belt condition and tension.
2. Check battery condition and charge.

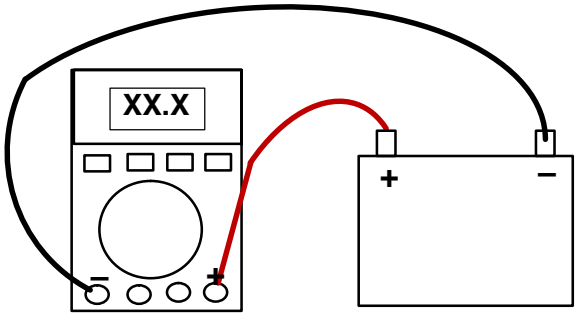

77395

3. Connect voltmeter leads directly to the battery posts.
4. Start engine and run at 1300-1500 rpm. Read voltmeter in VDC position. Most systems will read 13.8-14.8 volts.

NOTE: *If the voltage reading is within specifications, switch voltmeter to AC volt position. There should not be more than a 0.250 AC voltage reading with the engine* operating. *A reading of more than 0.250 AC volts indicates defective diodes in the alternator.*

5. If the voltmeter reading at the battery posts is below 13.5 volts, connect the voltmeter positive (+) lead to the alternator output terminal. Connect the voltmeter negative (–) lead to the ground terminal on the alternator. Repeat Step 4.

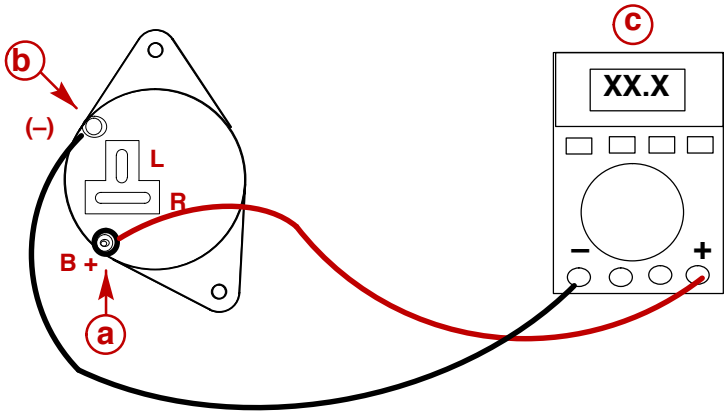

77395

a - Output Terminal
b - Ground Terminal
c - Voltmeter

6. If voltmeter reading is now within specifications, there is too much resistance between the alternator and the battery.
7. If the reading is below 12.5 volts, the alternator may not be charging. Check all wiring leading to the alternator.

Charging System Resistance

1. Engage the STOP switch and hold so that the engine does not start in the next step.
2. Crank engine over for 15 seconds to discharge the battery slightly.
3. Turn off all accessories.
4. Connect the voltmeter positive (+) lead to the alternator output terminal. Connect the voltmeter negative (–) lead to the battery positive (+) post.

NOTE: *Connect voltmeter lead to the battery post, NOT the battery cable end.*

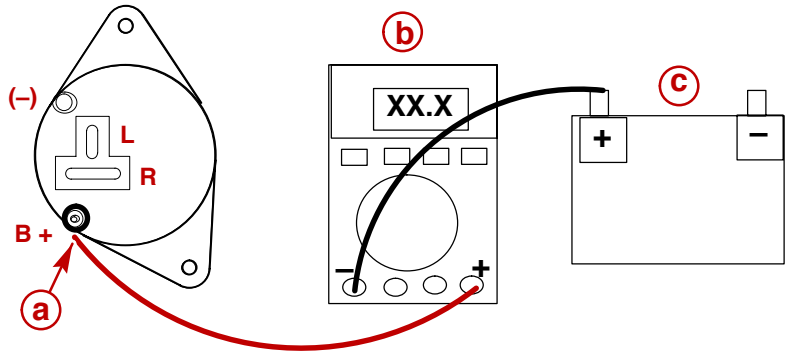

a - Output Terminal
b - Voltmeter
c - Battery

5. Start engine and run at 1300-1500 rpm. Read voltmeter. A reading of more than 0.5 volts shows excessive resistance in wiring.
6. Connect the voltmeter negative (–) lead to the alternator ground terminal. Connect voltmeter positive (+) lead to the battery negative (–) post.

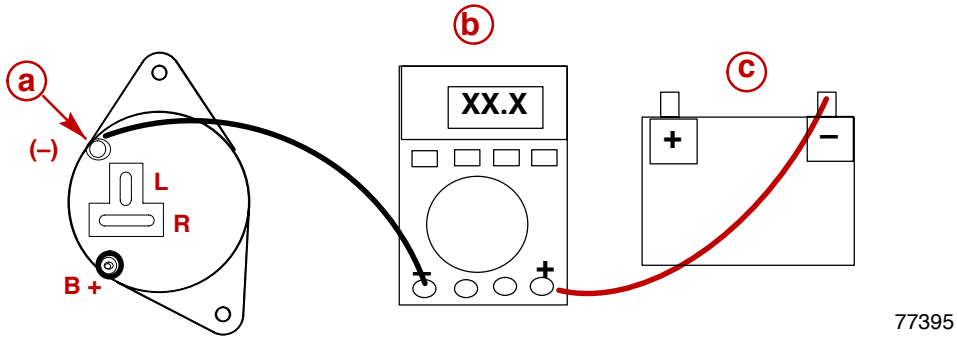

a - Ground Terminal
b - Voltmeter
c - Battery

7. Repeat Step 5.
8. Repair excessive resistance in wiring if present.

Circuitry

Perform the following test, using a 0-20 volt DC voltmeter, to ensure that all of the circuits between the alternator and other charging system components are in good condition.

OUTPUT CIRCUIT

1. Ensure that battery is fully charged.
2. Start engine and increase rpm to approximately 1500 rpm.
3. Check voltage reading. The voltage should read between 13.8 and 14.2 volts. If the reading is below 13.8 volts:
   a. Connect positive (+) voltmeter lead to alternator output post.
   b. Connect negative (–) lead to ground bolt on alternator.
   c. Move engine wiring harness while observing voltmeter. Meter should indicate approximate battery voltage and should not vary. If no reading is obtained, or if reading varies, resistance is in that part of the harness.

NOTE: *Harness wires shown for visual clarity; leave existing wiring connected when attaching voltmeter.*

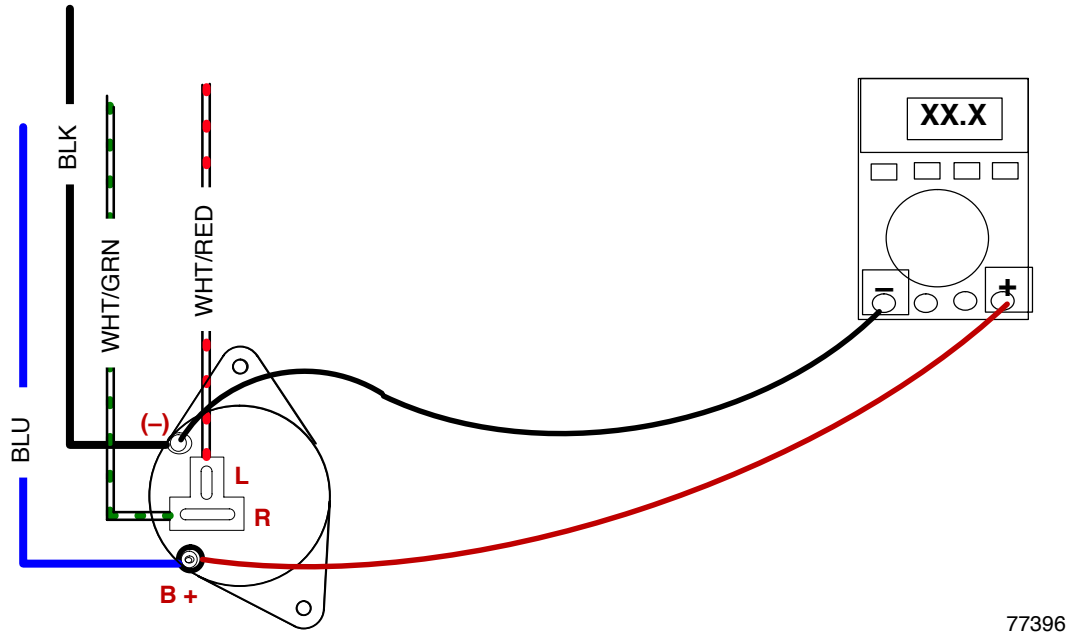

Connections For Harness Test

Installation

1. Position alternator in mounting bracket.
2. Install mounting bolts and nut. Torque bolts and nut.

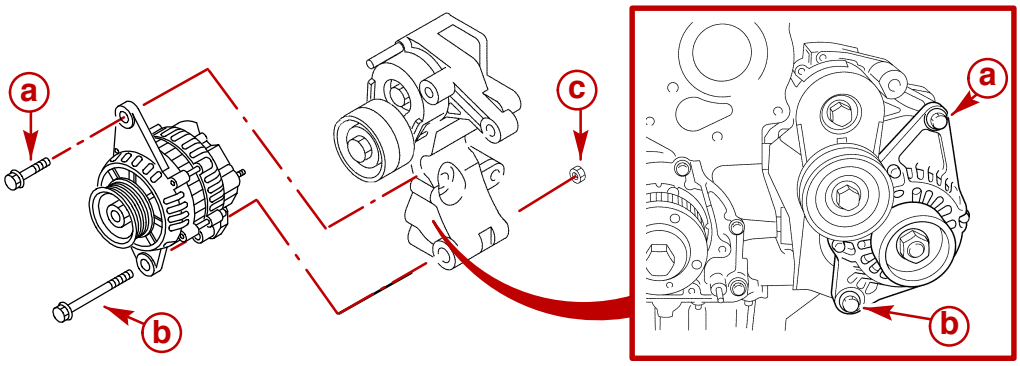

77148

a - Upper Bolt
b - Lower Bolt
c - Nut

Description		Nm	lb-in.	lb-ft
Bolt, Alternator-To-Bracket	M8 x 1.25	19	168	
Nut, Lower Mounting Bolt	M10 x 1.25	46		34

3. Connect wires to alternator. Apply a thin coat of liquid neoprene to terminals.
4. Position a suitable tool on automatic tensioner pulley fastener and rotate (move) tensioner pulley in direction of arrow.
5. Install serpentine belt.

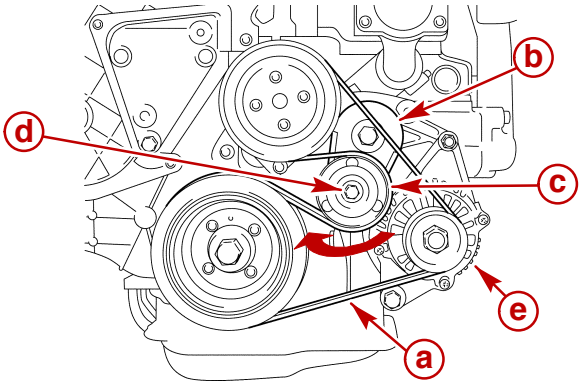

77139

a - Serpentine Belt
b - Automatic Tensioner
c - Pulley
d - Pulley Fastener
e - Alternator

6. Release pulley and allow tensioner to glide back slowly. Tensioner must return to initial position.
7. Install power steering belt, if equipped.

Alternator Bracket

Removal

1. Remove alternator.
2. Remove alternator bracket from cylinder block.

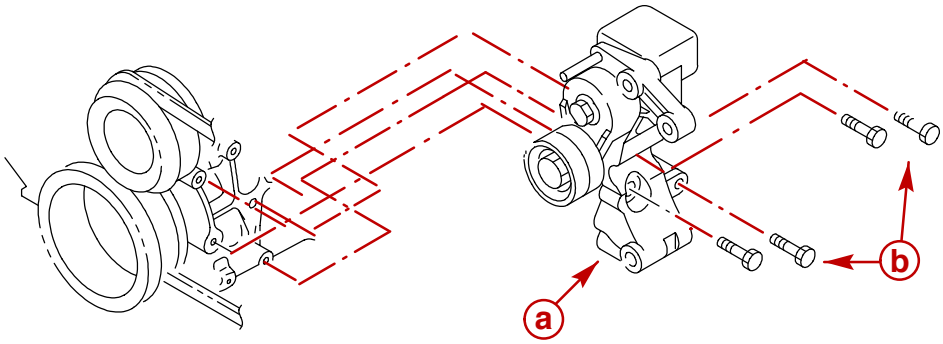

77721

a - Bracket
b - Bolts

Cleaning and Inspection

1. Clean parts in solvent. Dry with compressed air.
2. Check operation of automatic tensioner mechanism.
   a. Lock bracket in a vise.
   b. Position a suitable tool on automatic tensioner pulley fastener and rotate (move) tensioner pulley.
   c. Release pulley and allow tensioner to glide back slowly. Tensioner must return to initial position.
   d. Replace tensioner and bracket if necessary.
3. Check pulley bearing for excessive wear or damage. The tensioner pulley can be removed from the bracket for inspection. Loosen bolt. Replace tensioner and bracket if necessary.

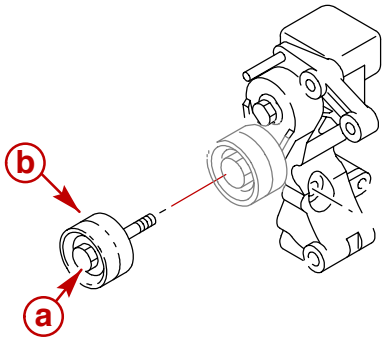

77398

a - Bolt
b - Tensioner Pulley

Description	Nm	lb-in.	lb-ft
Bolt, Tensioner Pulley	50		37

Installation

1. Install tensioner pulley. Torque bolt.

Description	Nm	lb-in.	lb-ft
Bolt, Tensioner Pulley	50		37

2. Position alternator bracket on cylinder block.
3. Install and torque bracket bolts.

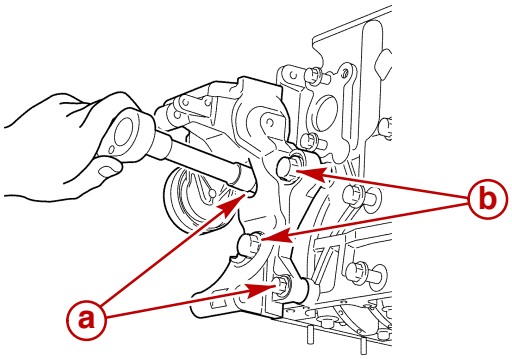

77149

a - Alternator Bracket Bolts
b - Alternator-To-Bracket Bolts

Description		Nm	lb-in.	lb-ft
Bolt, Bracket	M14 x 2.0	68		50
	M10 x 1.5	48		35

4. Install alternator.
5. Reconnect wiring and 2-way terminal to alternator.

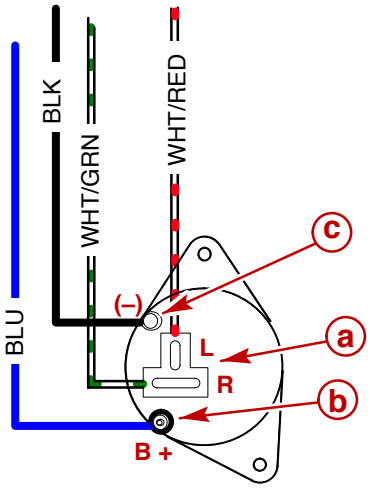

a - Two-Way Connector
b - Terminal B +- Output - (BLUE)
c - Negative Bolt (–) (BLACK)

6. Reconnect battery cables.

Maintenance

⚠ WARNING

Always disconnect battery cables from battery before working around electrical system components to prevent injury to yourself or damage to electrical system.

1. Inspect entire alternator system for corroded or loose connectors.
2. Check wiring for frayed or worn insulation.
3. Check alternator drive belt for excessive wear, cracks, fraying and glazed surfaces.
4. Check drive belt tension and adjust, if necessary. Refer to Serpentine Drive Belt Adjustment.
5. Check alternator mounting bolts for adequate torque.

THIS PAGE IS INTENTIONALLY BLANK

THIS PAGE IS INTENTIONALLY BLANK

ELECTRICAL SYSTEM

Section 4C - Glow Plug System (If Equipped)

Table of Contents

THIS PAGE IS INTENTIONALLY BLANK

Identification

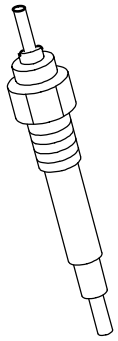

77399

Glow Plug - Typical

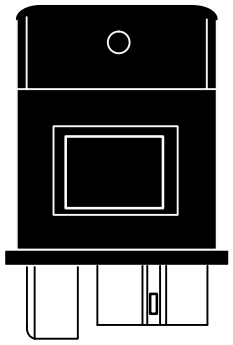

77725

Controller [1]

[1] Contains integrated circuits for current regulation and condition monitoring.

Specifications

NOTE: *Glow plug system will work only when engine temperature is below 50° C (122° F).*

Description	Specification
Glow Plug Diameter and Thread	M 10 x 1.25
Nominal Voltage	11
Resistance	Ohms
Beginning Current Draw	60 Amp
Current Draw after 30 Seconds of Operation	25 Amp
Preheat Time [1]	5 Sec

[1] Glow plug is 90% of peak temperature at 20° C (68° F)

Torque

Description	Nm	lb-in.	lb-ft
Glow Plug	19.6	174	

Tools

Description	Part Number
Digital Multi-Meter	91-99750A1

Lubricants / Sealants / Adhesives

Description	Where Used	Method of Use	Part Number
Liquid Neoprene	Exposed terminals and connections	Light coating on surfaces	92-25711--3
Perfect Seal	Glow Plug Water Temperature Switch	Light coat on threads	92-34227--1
Anti-seize Compound	Glow Plugs	Thread length	Obtain Locally

Glow Plug Testing

Test glow plug continuity before removal.

⚠ WARNING

Always disconnect battery cables from battery before working around electrical system components to prevent injury to yourself or damage to the electrical system.

1. Disconnect battery cables from battery.
2. Remove voltage supply wire connector from glow plug terminal.
3. Connect ohmmeter between engine ground and glow plug terminal. Continuity should exist. If no continuity exists, glow plug is faulty. Replace as necessary

Removal

⚠ WARNING

Always disconnect battery cables from battery before working around electrical system components to prevent injury to yourself or damage to the electrical system.

1. Disconnect battery cables from battery.
2. Remove sheathed glow plug connector from glow plug terminal.

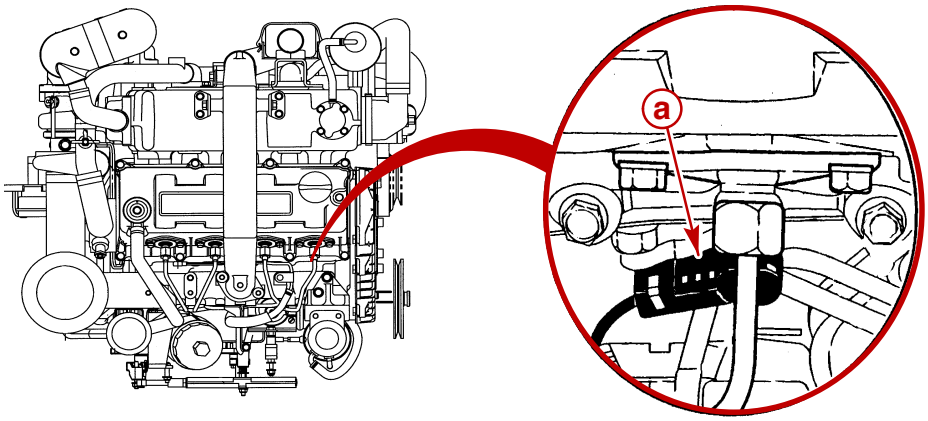

77714

a - Connector (4 Total)

⚠ CAUTION

Engine damage may occur. Avoid contaminating cylinders. Clean any corrosion or debris away from or around glow plug before removal.

3. Clean any contaminates away from around glow plug and opening in cylinder head.
4. Remove glow plug.

Cleaning

1. Clean corrosion and debris from:

- Contact area on glow plug terminal
- Voltage supply wire connector
- Cylinder head glow plug seat area

2. Clean the glow plug threaded areas, seat and heating element (tip).

Inspection

1. With glow plug removed, connect digital multi-meter between glow plug terminal (+) and glow plug external (–) threads. Continuity should exist. If no continuity exists, glow plug is faulty. Replace as necessary.
2. Connect digital multi-meter and check resistance between glow plug terminal (+) and glow plug external (–) threads. Refer to Specifications.

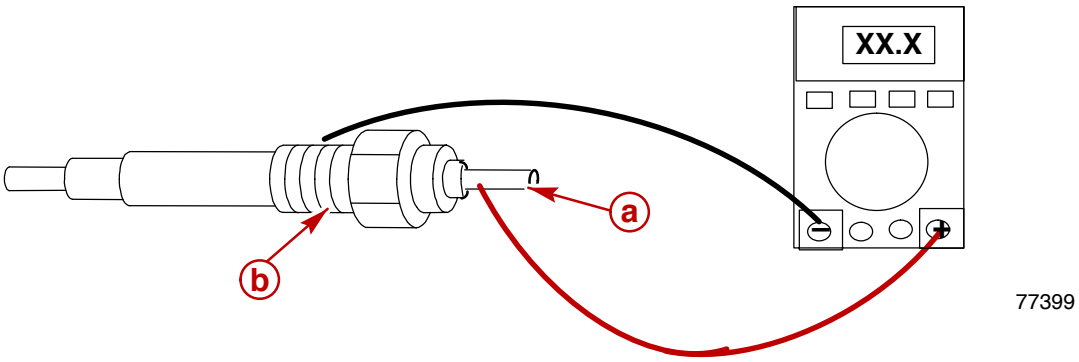

Typical

a - Terminal (+)
b - External Threads (–)

Installation

1. Ensure glow plug terminals and threads (contact areas) are clean.
2. Apply anti-seize compound to threads and install glow plugs.

Description	Where Used	Method of Use	Part Number
Anti-seize Compound	Glow Plugs	Thread length	Obtain Locally

3. Torque each glow plug.

Description	Nm	lb-in.	lb-ft
Glow Plug	19.6	174	

4. Install electrical connectors on glow plug terminals.

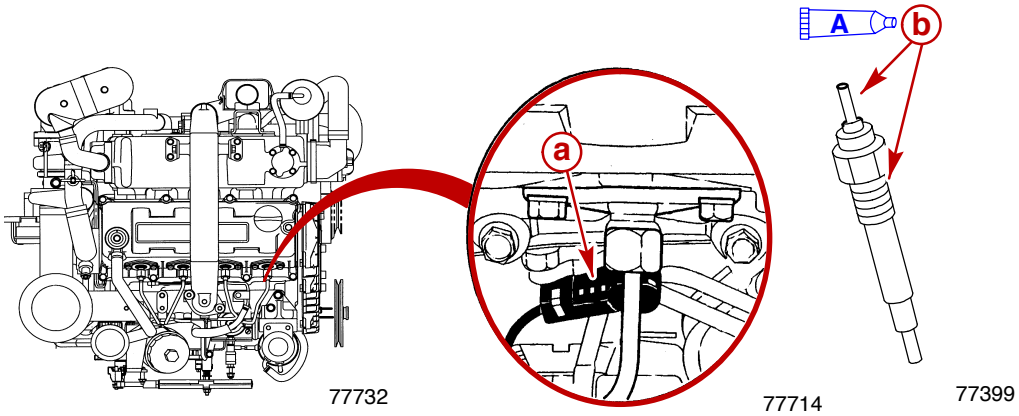

a - Connector (4 Total)
b - Contact Areas

5. Connect battery cables to battery.

Glow Plug Controller

Testing

IMPORTANT: Check the following before testing:

- **Battery is fully charged.**
- **Circuit breakers are not open (tripped).**
- **Fuse at instrument panel is not defective (blown).**
- **Plug-in connectors are fully engaged.**
- **All wires in circuit are connected.**
- **All connections are free of corrosion.**
- **Coolant temperature switch is present and in proper condition.**
- **Glow plugs are operational.**

NOTE: *Refer to Glow Plug Circuit Diagram.*

1. With key switch ON check for battery voltage at controller A terminal (BLUE wire in two-way connector at controller).
2. If no voltage is present, recheck items in the above IMPORTANT.
3. Disconnect the YELLOW wire at the glow plug water temperature switch. Temporarily connect the wire to ground (–).
4. With key switch ON, check for voltage on controller B terminal (BROWN wire in two-way connector at controller).
5. If voltage is present and glow plugs do not function, check bullet connector between BROWN and BLACK/RED wire to glow plugs. Repair if defective.
6. If no voltage is present, turn key switch OFF. The circuits related to controller, or the controller, are defective. Check circuits related to controller and / or replace controller.
   a. Disconnect controller six-way connector. Check continuity on YELLOW wire between water temperature switch to controller six-way connector. Repair if continuity does not exist.
   b. Check for proper ground (–) connection on BLACK wire (–) to controller six-way connector. Repair if continuity does not exist.

NOTE: *RED/WHITE wire to controller 6-way connector is for glow plug indicator lamp.*

   c. Replace controller if a. and b. are correct and system still does not operate correctly.

Removal

1. Disconnect wire connectors.
2. Remove controller.

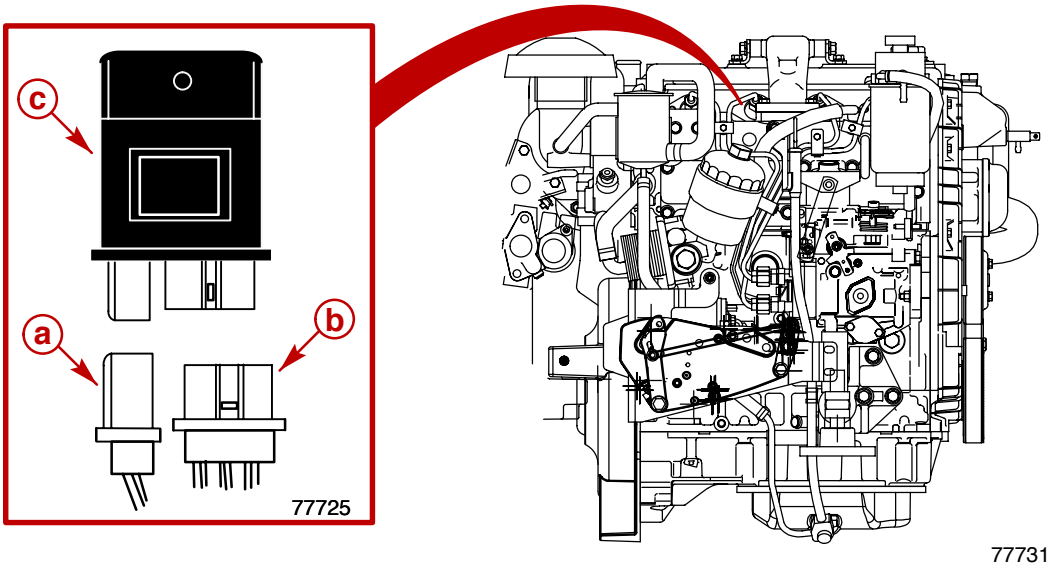

a - Wire Connector, 2-Way
b - Wire Connector, 6-Way
c - Controller

Cleaning

1. Clean exterior with a dry cloth.
2. Clean terminals with a suitable cleaner.

Inspection

1. Look for evidence of any physical damage to base or connector surfaces of controller.
2. Visually inspect electrical pins of ECT for straightness and corrosion.
3. Visually inspect connectors for corrosion and tightness.

Installation

1. Connect wire connectors to controllers.
2. Install controller.

Water Temperature Switch

Testing

1. Before testing observe the following to obtain proper results:
   a. Engine must be cold, less than 50° C (122° F).
   b. Fuse at instrument panel is not defective (blown). Circuit breaker is closed.
   c. Ensure that wiring harness connector is attached to water temperature switch.
2. Disconnect YELLOW wire harness connector from glow plug water temperature switch.
3. Turn key switch to RUN position.
4. Check for battery voltage at YELLOW wire. If voltage is not present, controller or related wiring and circuits may be defective. Refer to Glow Plug Controller.
5. Turn key switch OFF.
6. If voltage was present in Step 4. with YELLOW wire disconnected, connect a continuity meter between switch terminal and ground(–). If no continuity is present, replace switch.

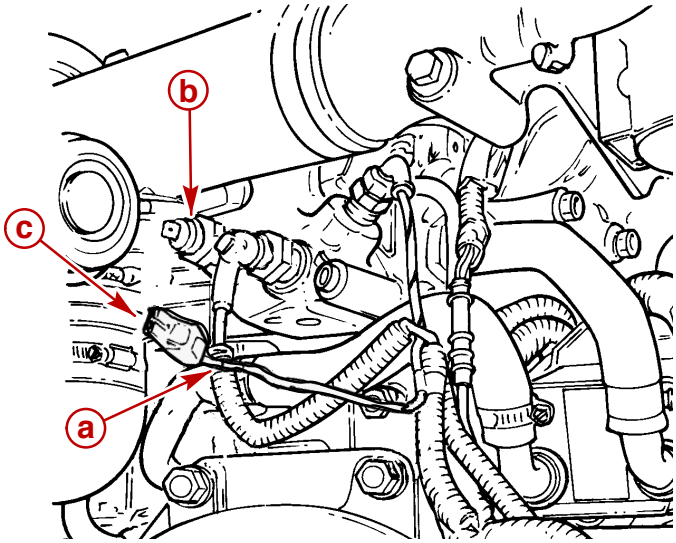

77355

a - YELLOW Wire
b - Glow Plug Water Temperature Sender
c - Wiring Harness Connector

Removal

1. Drain coolant from closed cooling system.
2. Disconnect YELLOW wire harness connector from glow plug water temperature switch.
3. Remove the glow plug water temperature switch from water fitting casting.

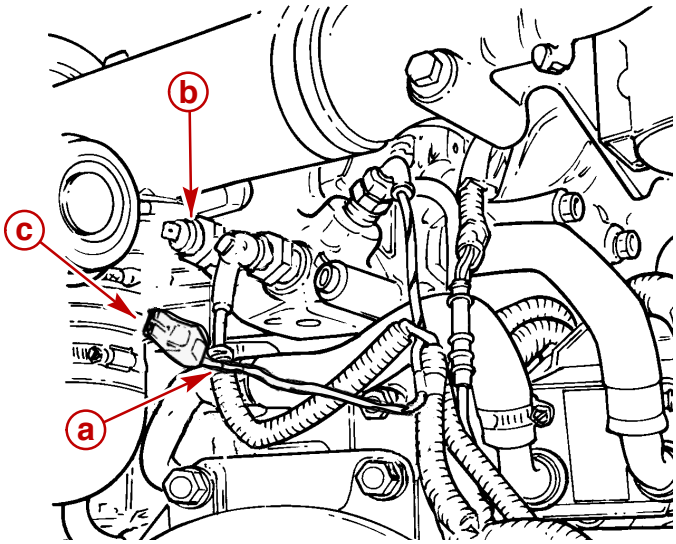

77355

a - YELLOW Wire
b - Glow Plug Water Temperature Switch
c - Wiring Harness Connector

Installation

1. Coat threads of glow plug water temperature switch with Loctite Pipe Sealant with Teflon.

Description	Where Used	Method of Use	Part Number
Loctite Pipe Sealant With Teflon	Glow Plug Water Temperature Switch	Light coat on threads	Obtain Locally

2. Install glow plug water temperature switch into water fitting casting.
3. Plug in YELLOW wire harness connector.
4. Fill closed cooling system with approved coolant.

Glow Plug Circuit Diagram

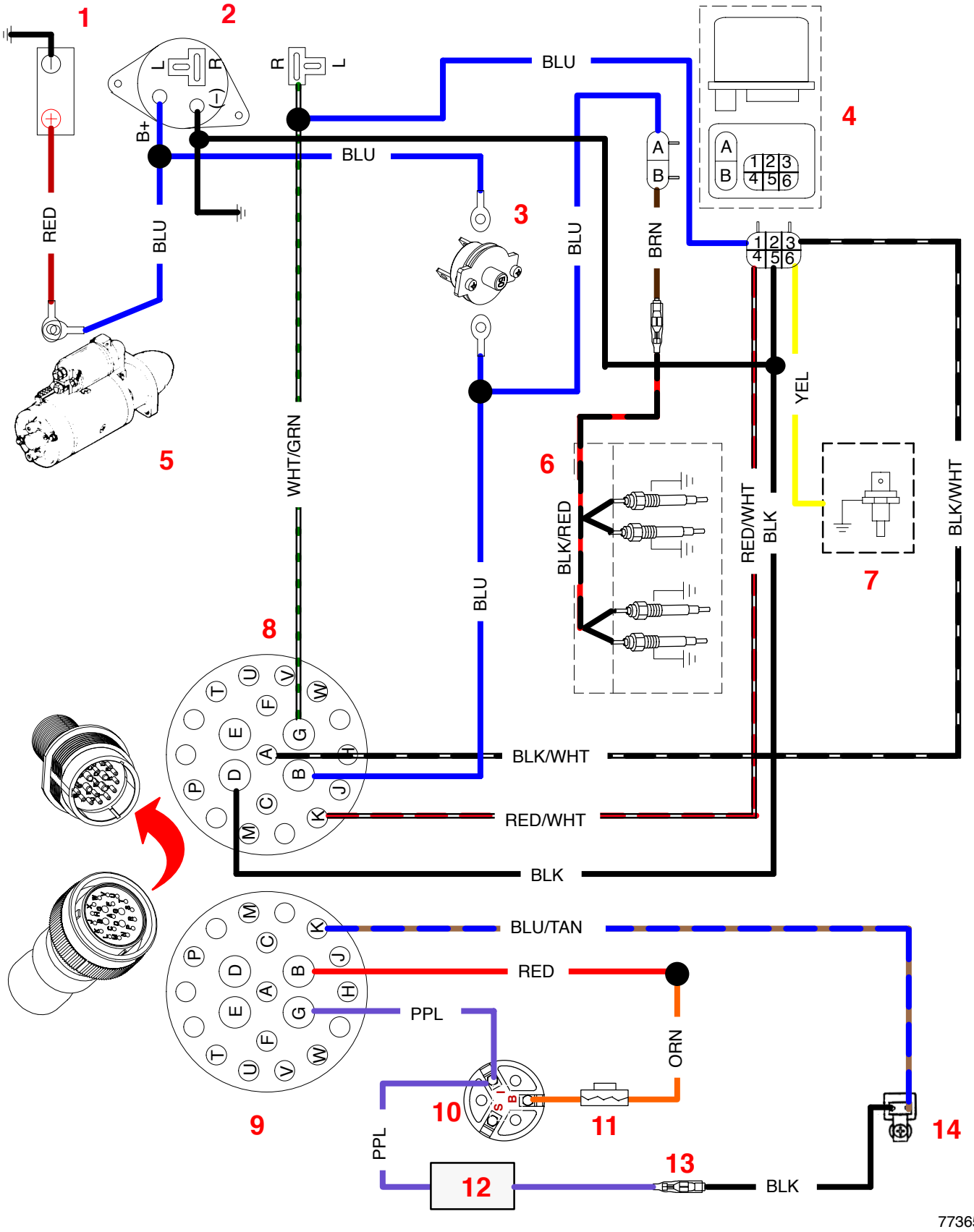

Glow Plug Circuit Diagram (Continued)

1 - Glow Plug
2 - Alternator
3 - Circuit Breaker
4 - Glow Plug Controller
5 - Starter
6 - Glow Plugs And Connector Harness
7 - Water Temperature Switch
8 - Engine Harness Connector
9 - Instrument / Extension Harness
10 - Key Switch
11 - Fuse
12 - Diode Pack
13 - Bullet Connector
14 - Preheat Indicator Lamp

THIS PAGE IS INTENTIONALLY BLANK

ELECTRICAL SYSTEM

Section 4D - Instrumentation

Table of Contents

THIS PAGE IS INTENTIONALLY BLANK

Identification

Gauges

QUICKSILVER INSTRUMENTS

NOTE: *One of three distinct series of Quicksilver gauges may be installed. Aside from different gauge face appearances and styling, the back of the gauges and wiring connections are different.*

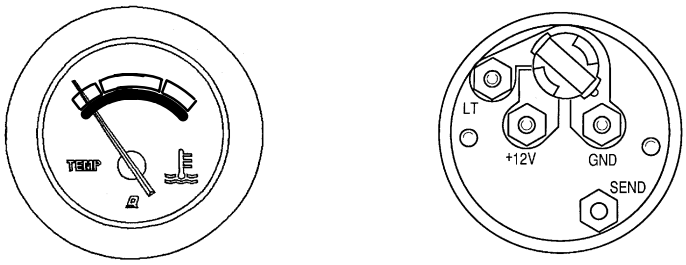

72965

Typical QSI Series

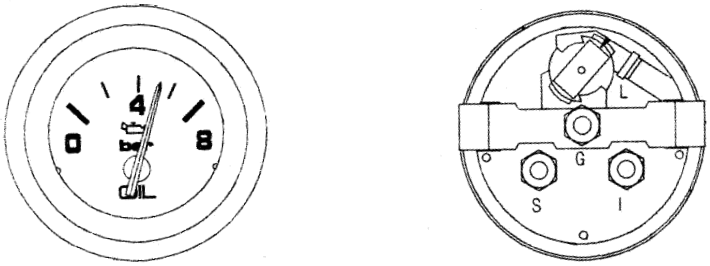

77333

Typical Admiral Series (Back of Flagship Series Similar)

Panels

QUICKSILVER INSTRUMENTS

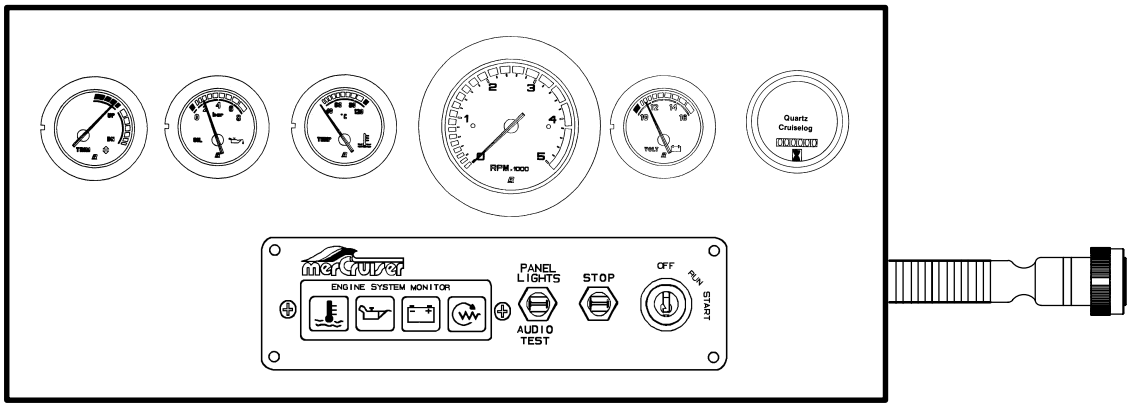

73546

Typical Quicksilver

BASIC INSTRUMENT PANEL

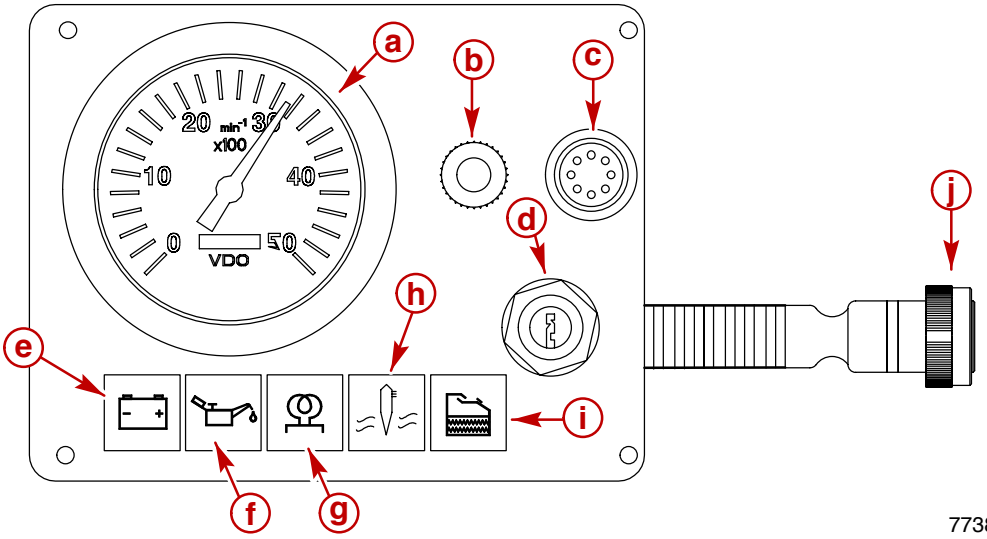

a - Tachometer
b - Panel Lights / Audio Warning Test Switch
c - Stop Switch
d - Key Switch
e - Charge Indicator Lamp
f - Oil Pressure Warning Lamp
g - Preheat Indicator Lamp
h - Coolant Temperature Warning Lamp
i - Water In Fuel Warning Lamp
j - Harness Connector

OPTIONAL INSTRUMENT PANEL

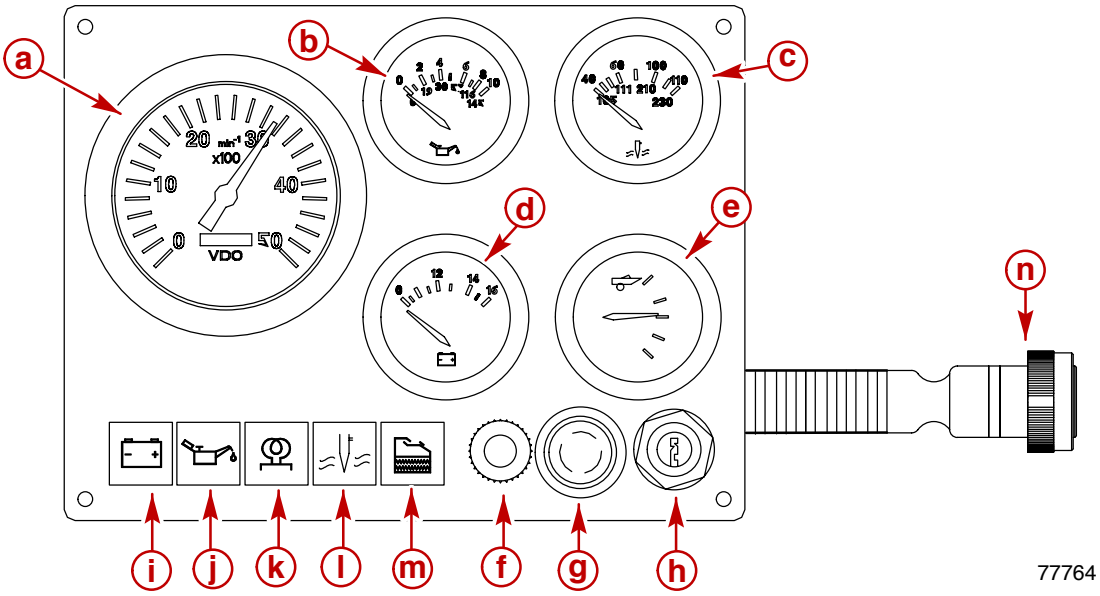

a - Tachometer
b - Oil Pressure Gauge
c - Coolant Temperature Gauge
d - Voltmeter
e - Trim Gauge
f - Instrument Lights / Audio Warning Test Switch
g - Stop Switch
h - Key Switch
i - Charge Indicator Lamp
j - Oil Pressure Warning Lamp
k - Preheat Indicator Lamp
l - Coolant Temperature Warning Lamp
m - Water In Fuel Warning Lamp
n - Harness Connector

Tools

Description	Part Number
Digital MultiMeter	91-99750A1
Connector Test Adapter Kit	J-35616-A
Equipment for performing tests (suitable container, thermometer, suitable heat source, sandblasting sand or equivalent and a 12 volt power source)	Obtain Locally
Diesel Timing Tool or suitable service tachometer	Obtain Locally

Lubricants / Sealants / Adhesives

Description	Where Used	Method of Use	Part Number
Liquid Neoprene	Exposed terminals and connections	Light coating on surfaces	92-25711--3
Loctite Pipe Sealant with Teflon	Senders, sensors and plugs	Apply to threads	Obtain Locally

Wire Color Abbreviations

BLK	Black		PUR or PPL	Purple
BLU	Blue		RED	Red
BRN	Brown		TAN	Tan
GRY	Gray		WHT	White
GRN	Green		YEL	Yellow
ORN	Orange		LIT or LT	Light
PNK	Pink		DRK	Dark

Precautions

⚠ WARNING

Always disconnect battery cables from battery before working around electrical system components to prevent injury to yourself or damage to electrical system.

⚠ CAUTION

Avoid short circuits. It may be necessary to remove instrument panel from dashboard to gain access to instruments and switches. Do not allow wires to come in contact with metal or other wires.

⚠ WARNING

Switch and sender testing involves the use of intense heat. Failure to follow appropriate procedures or warnings can cause burns which can result in severe personal injury. While performing the following test, observe these general precautions:

- **Wear personal protective clothing such as rubber gloves, a non-flammable apron and eye protection - preferably full face shield or safety glasses.**
- **The appropriate heat source should only be electric. Heat source should be operated by a qualified person. Be sure to follow all instructions of the manufacturer of the heat source. The heat source should be checked each time it is used to be sure it is functioning properly.**
- **The thermometer used in the test should be a high- temperature thermometer with a maximum reading of at least 150°C (300°F). Under no circumstances should the operator allow temperatures to exceed test specifications.**
- **Perform test only in a well ventilated area.**
- **Use a suitable container, such as metal, to hold the sand. Avoid use of glass containers unless the operator first confirms for himself/herself that the glass container is an appropriate high-temperature vessel.**
- **Because the components will reach high temperatures Do NOT handle materials or components until COMPLETELY cooled.**

⚠ WARNING

Use only clean, dry sand such as used for general sandblasting purposes. Use of sand containing contaminants could result in hazards such as fire, short circuiting, hot-spots, or other hazards.

General Information

IMPORTANT: If all instruments appear suspect, an electrical overload may have occurred. A fuse may be defective or a circuit breaker may be tripped open. The cause must be found and corrected before replacing fuse or resetting circuit breaker.

IMPORTANT: If all instruments appear suspect, check the main harness or electrical connector to ensure good contact.

Before testing individual instruments, check the following:

- All wires in circuit are connected.
- Connectors are fully engaged.
- Battery is fully charged.
- All connections are tight and corrosion free.
- Circuit breaker is closed.

Tachometer Special Information

Quicksilver Instrument Tachometer

Quicksilver tachometers provided by Mercury MerCruiser use a magnetic tachometer pickup which is part of the engine wiring harness.

If using a tachometer from another manufacturer that must be connected to the alternator for driving the tachometer, refer to tachometer manufacturer's instructions.

If using the Quicksilver Tachometer recommended for the engine package, the appropriate setting of the switch located on the back of the tachometer is given in the following chart.

Tachometer Switch Setting		
Model	**Number Of Cylinders**	**Switch Position**
D1.7L DTI	4	1 [1]

[1] 2 pulse counts per revolution.

Basic and Optional Instrument Panel Tachometer

There are two possible function settings:

- PULSE - used to set the known pulse count per revolution.
- ADJUST - used to calibrate the displayed rpm to agree with that of a manual rpm meter checking at the crankshaft.

FUNCTION SELECTION

1. Press and hold down the touch key on the back of the housing.
2. Turn ignition key to the ON position.

NOTE: *The display shows PULSE and ADJUST, alternating every 2 seconds.*

3. Select the desired function, PULSE or ADJUST, by releasing the touch key when the designated word is displayed.

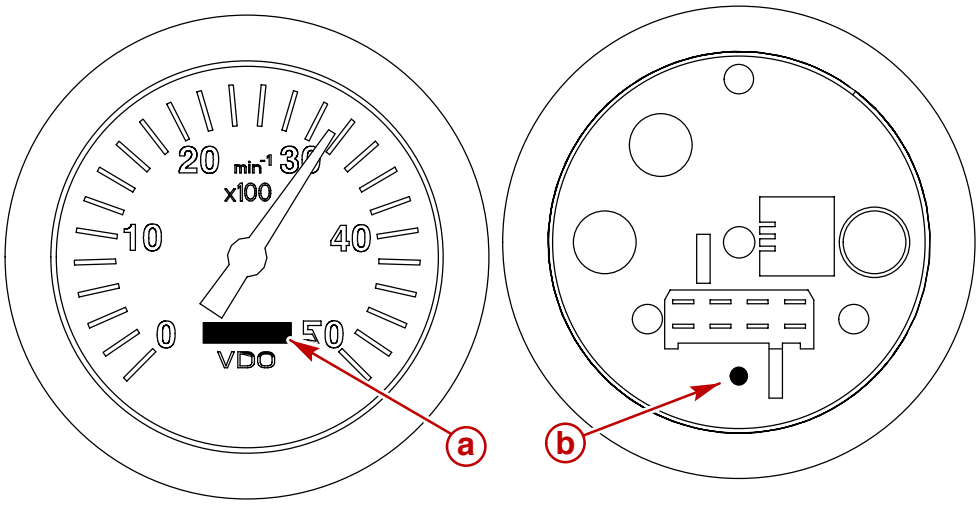

77390

Basic and Optional Instrument Panel Tachometer (Front and Rear View)

a - Display
b - Touch Key

PULSE FUNCTION

When the PULSE function is selected the pulses per revolution appears on the display after approximately 3 seconds, for example P 14.50. The last digit in the display will flash.

NOTE: Begin with the entry of the known pulse count immediately. Possible pulse count settings are 0.50 to 399.99.

1. Change the flashing digit by pushing the touch key until the desired setting is displayed.

Tachometer Switch Setting		
Model	**Pulses/Rev**	**Adjust**
D1.7L DTI	2	0

2. When the desired pulse count is reached release the touch key.
3. After the pulse count is selected, the display will change to show operating time.

Repeated selection of the PULSE function can serve as a check of the system.

ADJUST FUNCTION

NOTE: *Two people are required to make the following adjustments. The adjustment can be made only from 30 to 100% of the indicator range.*

IMPORTANT: When the ADJUST function is selected, the display shows UP or DOWN alternating every 3 seconds.

NOTE: *The pointer range changes very slowly at first, facilitating high-precision setting. The rate at which the pointer range changes increases the longer the key is held down.*

1. Connect a suitable manual rpm meter to the crankshaft of the engine.
2. Approximately 3 seconds after selecting the ADJUST function the letters UP or DN (meaning UP and DOWN) will begin to flash.
3. Press and hold the key when UP is displayed and the pointer range will increase.
4. Release the key for 2 seconds and then press it again and the pointer range will decrease.
5. When the tachometer reading is equal to the measured crankshaft rpm, release the key.
6. The display will then alternate between rpm and operating time.
7. Gauge adjustment is complete.

During normal operation it is possible to do a fine adjustment by using the key. The adjustment range is + / – 20%.

1. Press the touch key during the normal operation. In the display appears A 0.0.
2. Press and hold the key to increase the adjustment factor by 0.5% steps.
3. Release the key for 2 seconds and then press again to decrease the adjustment factor by 0.5% steps.
4. If the key is not pressed for 5 seconds, the adjustment factor will be stored and the indicator will switch to the normal operating hours display.

Quicksilver Gauges

Lighting Options

QSI SERIES

These gauges are equipped with optional illumination lighting. Light bulb socket can be removed and contacts can be aligned to be used with ignition switch lighting circuit +12 V or separate instrumentation lighting circuit LT. Standard position on diesel products is for use with the separate Panel Lights/Audio Warning Test Switch.

IMPORTANT: Light socket must be removed from gauge and turned when adjusting lighting option to desired setting. Turning socket while still installed in gauge could result in damage to gauge or socket.

NOTE: *For different lighting effects, colored sleeves are available through the Quicksilver Accessories and can be assembled to the bulb.*

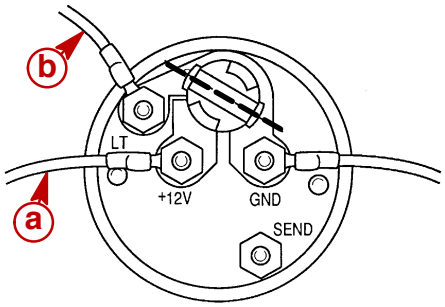

72969

Separate Instrumentation Lighting Circuit Position (Standard Position)

a - +12 V Power Supply From Ignition Switch
b - +12 V Power Supply From Panel Lights/Audio Warning Test Switch (GRN Wire)

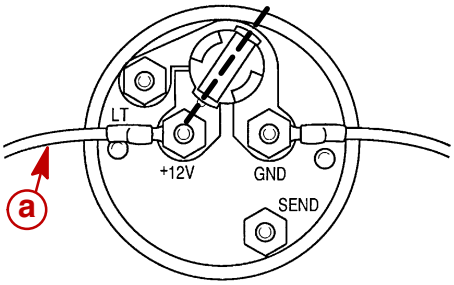

72968

Ignition Switch Lighting Circuit Position (Optional Position)

a - +12 V Power Supply From Ignition Switch (PUR Wire)

IMPORTANT: If testing proves a gauge to be defective, it must be replaced. There is no repair available.

Testing

OIL PRESSURE AND COOLANT TEMPERATURE

1. Turn ignition switch to the OFF position.
2. Remove sender wire from S terminal (SEND).

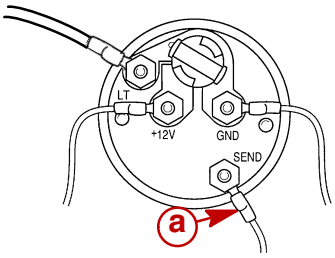

72819

Typical

a - S (SEND) - Sender Wire Lead

3. Turn ignition switch to the RUN position. Gauge being tested must be at position A.

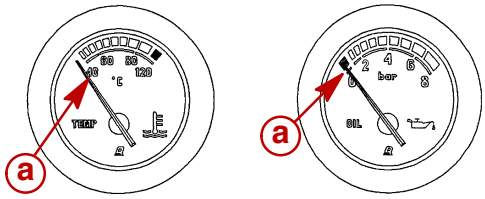

73288

Typical

a - Needle At Position A

4. Turn ignition switch to the OFF position.
5. Connect jumper wire from G terminal (GND) to S terminal (SEND).

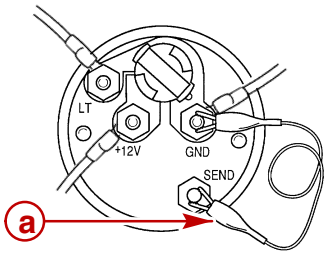

72748

Typical

a - Jumper Wire

6. Turn ignition switch to the RUN position.

7. Indicator needle of gauge being tested must read at position B.

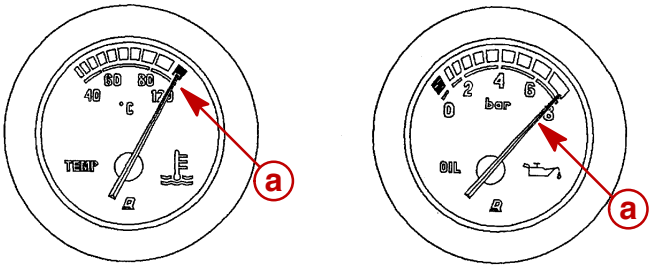

73289

Typical

a - Needle At Position B

VOLT METER GAUGE

1. Remove cables from battery and fully charge battery.
2. Remove wires from back of gauge.
3. Connect negative (–) jumper lead from battery to gauge G terminal (GND).
4. Connect positive (+) jumper lead from a 12 Volt power source or battery to gauge I terminal or +12 V.
5. Check gauge reading; if not indicating battery voltage, as shown, replace gauge.

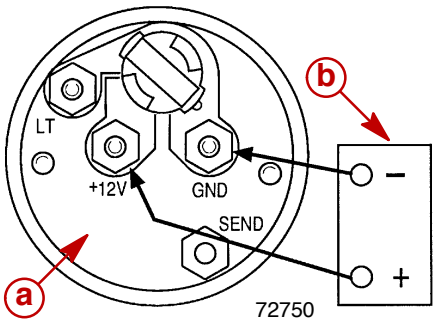

72750

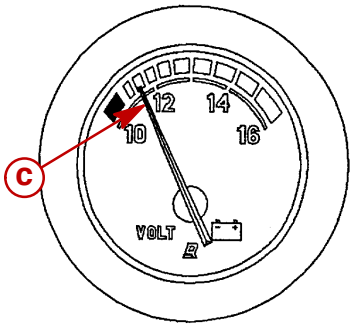

73290

Typical

a - Volt Meter Gauge
b - 12 Volt Power Source
c - Needle Indicating Battery Voltage

CRUISELOG (ENGINE HOUR METER, IF EQUIPPED)

1. Remove cables from battery and fully charge battery. Remove wires from back of gauge.
2. Connect positive (+) jumper lead from battery to gauge terminal + (12 V).
3. Connect negative (–) jumper lead from battery to gauge terminal GND (ground).

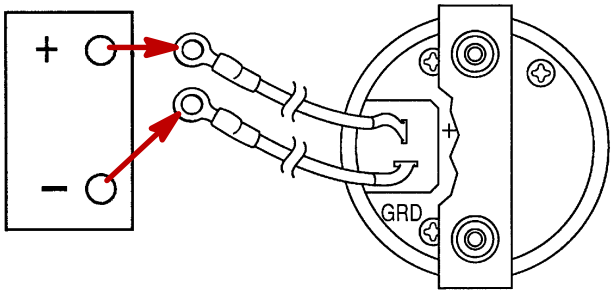

72815

77733

4. Observe gauge run indicator on face of gauge. If indicator is turning, the gauge is operable. If not, replace gauge.

QUICKSILVER INSTRUMENT TACHOMETER

1. If gauge is not accurate, be certain the switch on the back of the tachometer is set properly. For engines using magnetic tachometer pickup for source, the setting is:

Tachometer Switch Setting		
Model	**Number Of Cylinders**	**Switch Position**
D1.7L DTI	4	1 [1]

[1] 2 pulse counts per revolution.

NOTE: *Refer to Tachometer Special Information if using an alternator driven tachometer.*

2. If properly set and still inaccurate, connect a diesel timing tool or suitable service tachometer to engine and compare readings.
3. Replace if not within specifications.

Tachometer Type	Allowable Range
5000 RPM	± 100 RPM

Gauge Replacement

1. Disconnect battery cables from battery.
2. Remove wires from back of gauge.
3. Disconnect light socket wiring if separate.
4. Remove holding strap and remove gauge.
5. Position gauge assembly in appropriate mounting hole.

IMPORTANT: Do not distort case or bracket by over tightening.

6. Install holding strap and nuts. Tighten nuts evenly and securely.
7. Connect ground (BLK) wire to ground terminal, if gauge is not mounted in metal panel.
8. Connect other wires to gauge. Refer to SECTION 4E - Wiring Diagrams.
9. Install gauge light socket.
10. Coat all terminals with Liquid Neoprene.
11. Connect battery cables to battery.

Quicksilver Primary Station Switches

IMPORTANT: The decal, or decals, on the side of the toggle switches, with the arrow and the word "UP", refer to the position of the switch *when installed on the panel*.

Ignition Key Switch

REMOVAL

1. Disconnect battery cables from battery.
2. Remove nut retaining switch to Engine System Monitor Panel.

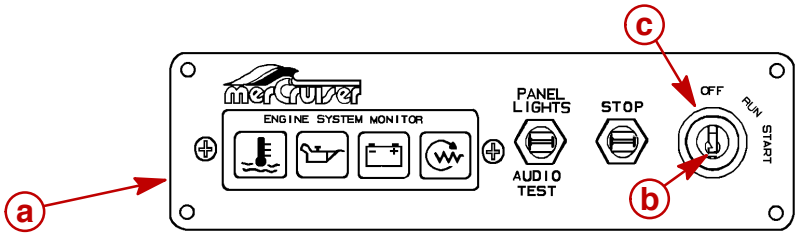

73546

a - Engine System Monitor Panel
b - Ignition Key Switch
c - Retainer

3. Remove wires from back of switch.

TESTING

1. Before testing key switch, check all fuses and/or circuit breakers in electrical circuit which could prevent operation of starter.
2. If proceeding to test switch with harness wires remaining connected, disconnect battery cables from battery. With key switch in OFF position, there should be no continuity between switch terminals.
3. With key switch in RUN position, continuity will exist between switch terminals B to I. There should be no continuity between terminal S and any other terminal.
4. With key switch in the START position, continuity will exist between terminals B to I and B to S.
5. Terminals make contact at angles shown and stay in contacted condition as switch is rotated toward START.
6. If ignition key switch tests bad, unscrew or unsolder wire connections and remove switch. Test switch again, as in Steps 2.-5. If switch tests good, wiring in harness is bad. There should be no continuity between any switch harness wires with key switch removed.

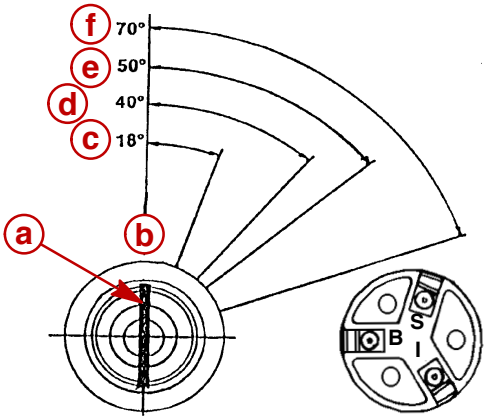

Key View Back View 74103

a - Key
b - Off
c - Continuity B to I Terminals
d - Run
e - Continuity, B to S Terminals
f - Start

INSTALLATION

1. Connect wires on back of key switch.
2. Install switch in panel. Tighten retaining nut.
3. Coat all terminals with Liquid Neoprene.
4. Connect battery cables to battery.

Stop Switch

The STOP switch is a single-pole, momentarily closed switch, provided for stopping the engine. This is done by electrically shutting off the fuel delivery system.

NOTE: *The ignition key switch must be in the RUN position for the stop switch to function properly when installed and connected.*

REMOVAL

1. Disconnect battery cables from battery.
2. Remove hex nut retaining switch to Engine System Monitor Panel.

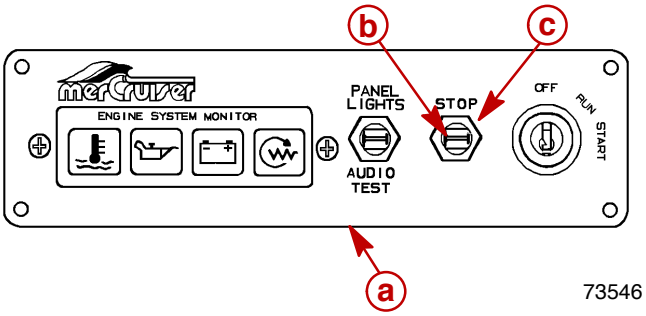

a - Engine System Monitor Panel
b - Toggle STOP Switch
c - Hex Nut Retainer

3. Remove wires from back of switch.

TESTING

1. With switch removed, or accessible, attach an ohmmeter to terminal numbers 1 and 2 as indicated by the decal.
2. With switch lever toggled DOWN to its spring loaded position continuity should exist between terminal numbers 1 and 2. If no continuity exists, replace switch.

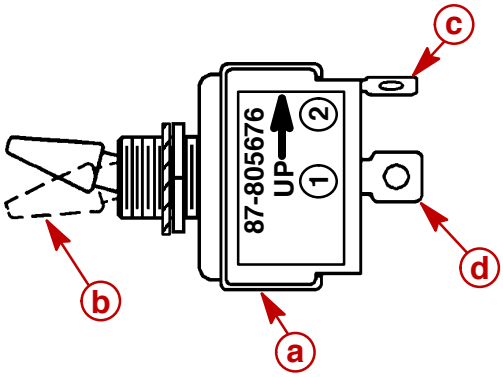

a - Stop Switch
b - Toggle Lever Spring Loaded Position (Direction of Movement DOWN When Installed)
c - Terminal Number 2
d - Terminal Number 1

INSTALLATION

1. Using screws provided, install wires to appropriate switch terminals as shown in chart.

Harness Wire	Connect To:	Terminal Number
YEL	▶	1
ORN	▶	2

2. Ensure that all connections are secure. Seal terminals with Liquid Neoprene.
3. Install switch in Engine System Monitor Panel. Tighten hex nut securely to prevent switch from turning in its mounting hole. Do NOT overtighten.

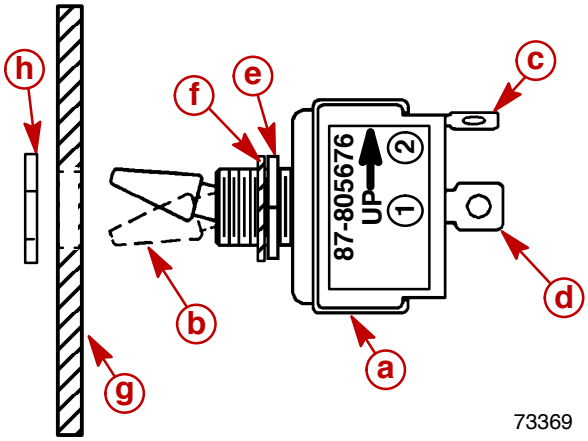

a - Stop Switch
b - Toggle Lever Spring Loaded Position (Direction of Movement DOWN When Installed)
c - Terminal Number 2
d - Terminal Number 1
e - Jam Nut
f - Locking Washer
g - Panel
h - Hex Nut Retainer

4. Connect battery cables to battery.

Audio Warning Test and Panel Light Switch

The switch provided for the audio warning test and panel (dash) lights is a three-position toggle switch. It must be wired and installed correctly to provide proper operation of the systems.

REMOVAL

1. Disconnect battery cables from battery.
2. Remove hex nut retaining the switch to the Engine System Monitor Pane.
3. Remove wires from back of switch.

TESTING

1. With switch lever toggled DOWN to its spring loaded AUDIO TEST position continuity should exist between terminal numbers 1 and 2 (as indicated by decals). If no continuity exists, replace switch.
2. With switch lever toggled UP to the panel light ON position, continuity should exist between terminal numbers 4 and 5 (as indicated by decals). If no continuity exists, replace switch.

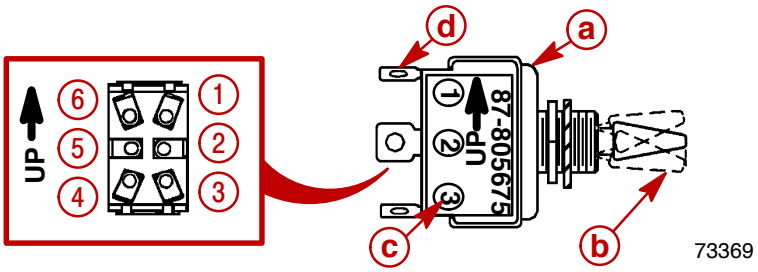

a - Audio Warning Test And Panel Light Switch
b - Spring-Loaded Audio Test Portion (Direction of Movement DOWN When Installed)
c - Terminal Numbers
d - Terminals

INSTALLATION

1. Using screws provided, connect the listed color coded wires to numbered switch terminals as shown.
2. Make sure that all connections are secure. Seal terminals with Liquid Neoprene.
3. Install switch in Engine System Monitor panel. Tighten hex nut securely to prevent switch from turning in its mounting hole. Do NOT overtighten.

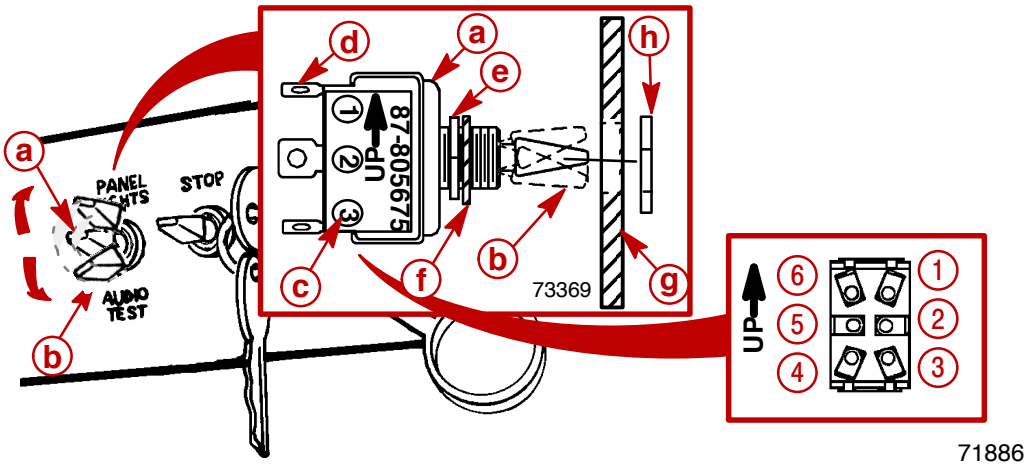

a - Audio Warning Test And Panel Light Switch
b - Spring-Loaded Audio Test Portion (Direction of Movement DOWN When Installed)
c - Terminal Numbers
d - Terminals
e - Jam Nut
f - Lock Washer
g - Engine System Monitor Panel
h - Hex Nut

Harness Wire	Connect To:	Terminal Number
TAN/BLK TAN/WHT PUR/ORN	▶	1
BLK and BLK	▶	2
PPL	▶	4
GRN	▶	5

4. Connect battery cables to battery.

Basic and Optional Instrument Panel - Primary Station Switches

NOTE: *Information and specifications regarding the Basic and Optional Instrument Panel Kit switches that may have been installed on the various models were not available at the time this manual was printed.*

Quicksilver Secondary Station Switches

Audio Warning Test and Panel Light Switch

The switch provided for the audio warning test and panel (dash) lights is a three-position toggle switch. It must be wired and installed correctly to provide proper operation of the systems. Information and procedures are the same as for Primary Station Audio Warning Test and Panel Light Switch.

Start Switch

The START switch, provided for starting the engine at this second station, is a single-pole, momentarily closed switch.

REMOVAL

1. Disconnect battery cables from battery.
2. Remove hex nut retaining switch to Engine System Monitor Panel.
3. Remove wires from back of switch.

TESTING

1. Toggle switch lever to its spring loaded START position.
2. Continuity should exist between terminal numbers 1 and 2 (as indicated by decals). If no continuity exists, replace switch.

INSTALLATION

1. Using screws provided, connect the listed color coded wires to numbered switch terminals as shown in chart.
2. Make sure that all connections are secure. Seal terminals with Liquid Neoprene.
3. Install jam nut and lock washer on switch threaded portion. Secure to panel using hex nut. Tighten securely to prevent switch from turning in hole. Do NOT overtighten.

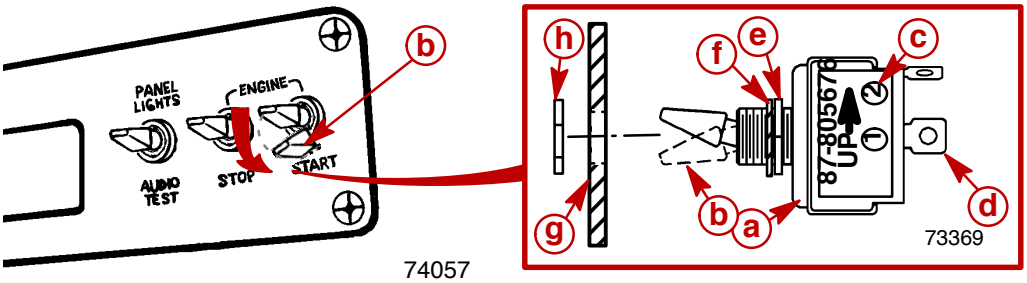

a - Start Switch
b - Toggle Lever Spring Loaded Position (Direction of Movement DOWN When Installed)
c - Terminal Number
d - Terminal
e - Jam Nut
f - Lock Washer
g - Panel
h - Hex Nut

Harness Wire	Connect To:	Terminal Number
PPL	▶	1
YEL/RED and RED/YEL	▶	2

4. Connect battery cables to battery.

Stop Switch

The STOP switch, provided for stopping the engine at this second station, is a single-pole, momentarily closed switch.

REMOVAL

1. Disconnect battery cables from battery.
2. Remove hex nut retaining switch to Engine System Monitor Panel.
3. Remove wires from back of switch.

TESTING

1. Toggle switch lever to its spring loaded START position.
2. Continuity should exist between terminal numbers 1 and 2 (as indicated by decals). If no continuity exists, replace switch.

INSTALLATION

1. Using screws provided, connect the listed color coded wires to numbered switch terminals as shown in chart.
2. Make sure that all connections are secure. Seal terminals with Liquid Neoprene.
3. Install jam nut and locking washer on switch threaded portion. Secure to panel using hex nut. Tighten securely to prevent switch from turning in hole. Do NOT overtighten.

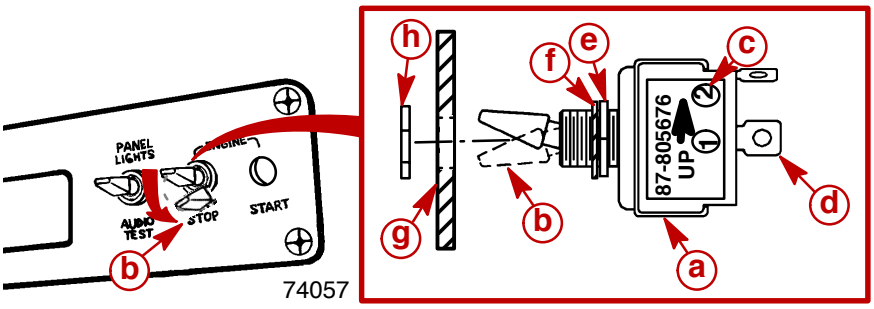

a - Stop Switch
b - Toggle Lever Spring Loaded Position (Direction of Movement DOWN When Installed)
c - Terminal Number
d - Terminal
e - Jam Nut
f - Locking Washer

Harness Wire	Connect To:	Terminal Number and/or Connection Location
ORN	▶	1
YEL	▶	2

NOTE: *Wire is sta-strapped to instrument harness near connector collar.*

4. Connect battery cables to battery.

Basic and Optional Instrument Panel - Secondary Station Switches

NOTE: *Information and specifications regarding the Basic and Optional Instrument Secondary Panel Kit switches that may have been installed on the various models were not available at the time this manual was printed.*

Senders / Sensors

Tachometer Sensor

REMOVAL

1. Disconnect battery cables from battery.
2. Disconnect engine harness and tachometer signal amplifier from tachometer (rpm) sensor.
3. Remove screw retaining sensor to cylinder block.
4. Remove sensor from cylinder block.

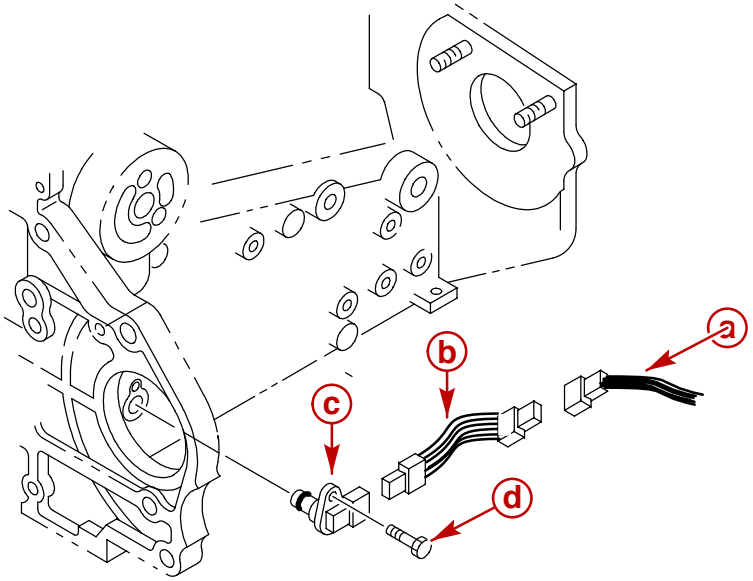

a - Engine Harness
b - Tachometer Signal Amplifier
c - Tachometer Sensor
d - Screw

CLEANING

1. Clean sensor and connector with a dry cloth.
2. Clean harness connector.

INSPECTION

1. Look for evidence of any physical damage to sensor surfaces and tip of sensor.
2. Visually inspect connectors for corrosion and loose terminals.
3. Inspect O-ring for damage.

INSTALLATION

1. Lubricate O-ring with clean engine oil.

Description	Where Used	Method of Use	Part Number
Engine Oil	Tachometer sensor O-ring	Coat surfaces	Obtain Locally

2. Install sensor into cylinder block.
3. Install screw retaining sensor to cylinder block. Tighten screw securely.
4. Connect engine harness to sensor.
5. Connect battery cables to battery.

Oil Pressure Sender

REMOVAL

1. Disconnect battery cables from battery.
2. Remove YEL/BLK wire from sender.
3. Remove the sender.

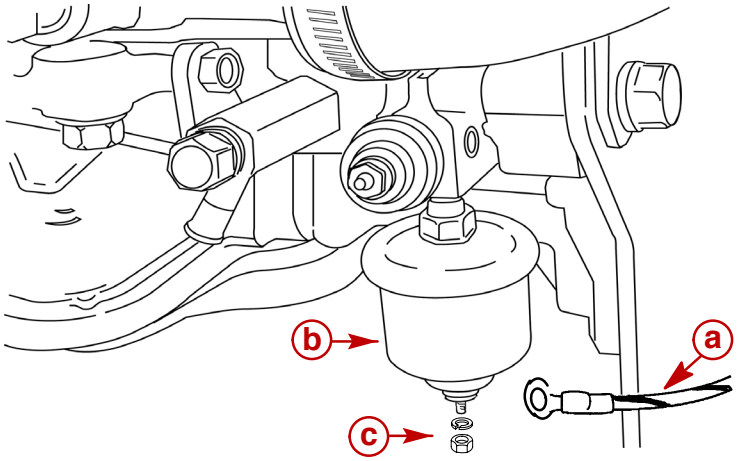

77356

a - YEL/BLK Wire
b - Oil Pressure Sender
c - Nut And Washer

TESTING

IMPORTANT: Use following test procedure for checking *accuracy* of oil pressure sender only. If oil pressure gauge indicates zero oil pressure, refer to SECTION 1C - Troubleshooting.

1. Remove YEL/BLK wire from sender. Insulate wire to avoid possible short circuit.
2. Install a manual pressure gauge graduated in at least 100 kPa (10 psi or 1 bar) increments, using a suitable T-fitting arrangement with the existing sender and adaptor or fitting.
3. Connect an ohmmeter between sender terminal and sender case.

NOTE: *Sender shown removed for visual clarity.*

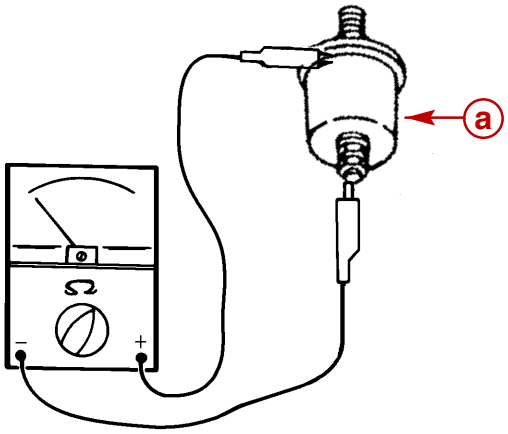

a - Oil Pressure Sender

4. Refer to chart. Check the resistance values of the appropriate sender at pressures as shown and verified on manual gauge with engine operating. Replace sender if values are not correct.

SINGLE STATION SENDER - 805267	
Oil Pressure kPa (psi)	**Ohms Reading**
0 (0)	240 ± 15 Ω
413.7 (60)	103 ± 15 Ω

DUAL STATION SENDER - 805268	
Oil Pressure kPa (psi)	**Ohms Reading**
0 (0)	120 ± 7 Ω
413.7 (60)	52 ± 7 Ω

5. Lightly coat threads of oil sender with Loctite Pipe Sealant with Teflon and install. Torque sender.

Description	Where Used	Method of Use	Part Number
Loctite Pipe Sealant with Teflon	Sender	Apply to threads	Obtain Locally

Description		Nm	lb-in.	lb-ft
Sender, Oil Pressure	NPTF 1/8 in.	12.7	113	

6. Seal terminals with Liquid Neoprene.
7. Connect battery cables to battery.

Coolant Temperature Sender

NOTE: *The following information applies to primary and secondary station senders.*

REMOVAL

1. Disconnect battery cables from battery.
2. Drain coolant from closed cooling system into a suitable container.
3. Remove harness wire from coolant temperature sender.
4. Hold adapter with suitable wrench. Remove sender.

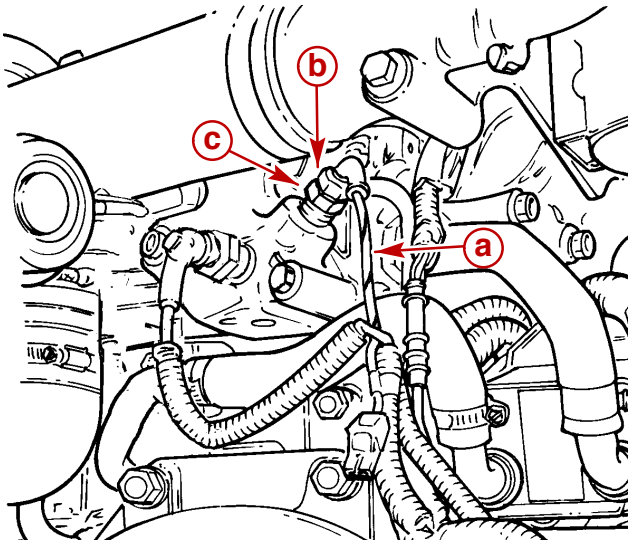

77355

a - YEL/GRN Wire
b - Coolant Temperature Sender
c - Adapter

TESTING

IMPORTANT: Use the following test to determine the *accuracy* of the Coolant Temperature Sender gauge circuit. If gauge indicates NO temperature when running engine refer to SECTION 1C.

NOTICE
Read WARNING about switch and sender testing in Precautions at front of this section before proceeding with tests.

1. Connect an ohmmeter between sender terminal and hex (case) for ground (–).

⚠ WARNING
Use only clean, dry sand such as used for general sandblasting purposes. Use of sand containing contaminants could result in hazards such as fire, short circuiting, hot-spots or other hazards.

2. Using a suitable container, thermometer and heat source, suspend sender with tip in sand.
3. Heat sand and observe temperature on thermometer.
4. As temperature rises, ohmmeter readings must be within the ranges specified for each temperature.

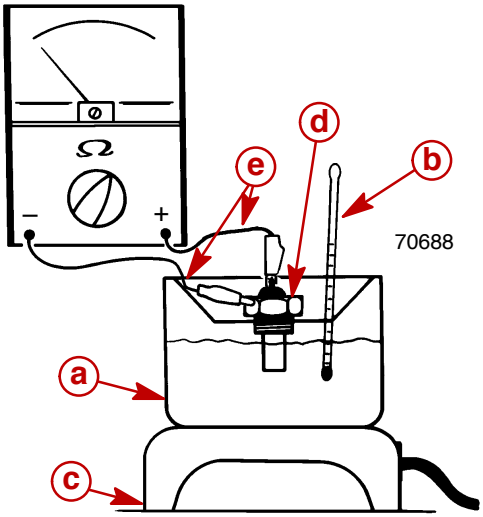

70688

a - Suitable Container
b - Thermometer
c - Heat Source
d - Coolant Temperature Sender
e - Ohmmeter Leads

PRIMARY STATION SENDER	
Test Temperature	**Ohms Reading**
60° C (140° F)	121 - 147 Ω
90° C (194° F)	47 - 55 Ω
100° C (212° F)	36 - 41 Ω

SECOND STATION SENDER - 49734	
Test Temperature	**Ohms Reading**
38° C (100° F)	203 - 247 Ω
71° C (160° F)	59 - 70 Ω
104° C (220° F)	22 - 25 Ω

5. Turn heat source OFF. Allow sand and components to cool.

NOTE: *While sand cools recheck ohmmeter readings.*

INSTALLATION

1. Lightly coat threads of sender with Loctite Pipe Sealant with Teflon and install. Torque sender.

Description	Where Used	Method of Use	Part Number
Loctite Pipe Sealant with Teflon	Sender	Apply to threads	Obtain Locally

Description		Nm	lb-in.	lb-ft
Sender, Coolant Temperature	NPTF 1/8 in.	12.7	113	

2. Connect YEL/GRN harness wire. Seal terminals with Liquid Neoprene.
3. Connect battery cables to battery.
4. Fill closed cooling system.

Audio Warning System

The Audio Warning System is divided into two separate circuits - low oil pressure and coolant temperature (overheat). Both circuits have an individual audio warning alarm. The low oil pressure circuit includes a audio suppression relay (time delay) during glow plug operation.

Alarm

⚠ WARNING

The following test involves the use of electricity. Failure to follow appropriate procedures can cause burns or shock which can result in severe personal injury or death.

TESTING

1. The function of an audio warning alarm can be tested by holding the toggle lever of the audio test switch DOWN momentarily, with the key switch in the RUN position. If the alarm sounds, it is operable.
2. If alarm does not sound:
   a. Disconnect bullet connectors from suspect alarm.
   b. Connect a 12 volt positive (+) jumper wire to the alarm where the PUR or BRN/WHT wire (depending on which alarm is being tested) was connected.
   c. Connect the remaining wire (where the TAN/BLK or TAN/WHT was connected) to a clean, unpainted ground or negative (–) connection using a jumper wire.
   d. If alarm does not sound, replace it.
3. If the alarm worked in Step 2. reconnect wires and:
   a. Remove wires at the switches involved and briefly jumper the harness wire ends together. With the key switch in the RUN position, the alarm should sound.
   b. If alarm sounds, the problem is in a switch. Refer to individual switches Testing and test suspect switch. Replace switch.
4. If the alarm did not sound in Step 3., refer to wiring diagrams and check wires or connectors to the individual switches. Repair as necessary.

Oil Pressure Switch

TESTING

When the engine is OFF the switch is normally closed.

1. Remove YEL/BLU wire from switch. Insulate to avoid possible short circuit.
2. Connect continuity meter between switch terminal and switch case [negative (–)]. With engine not operating, meter should indicate full continuity.

NOTE: *Sender shown removed for visual clarity.*

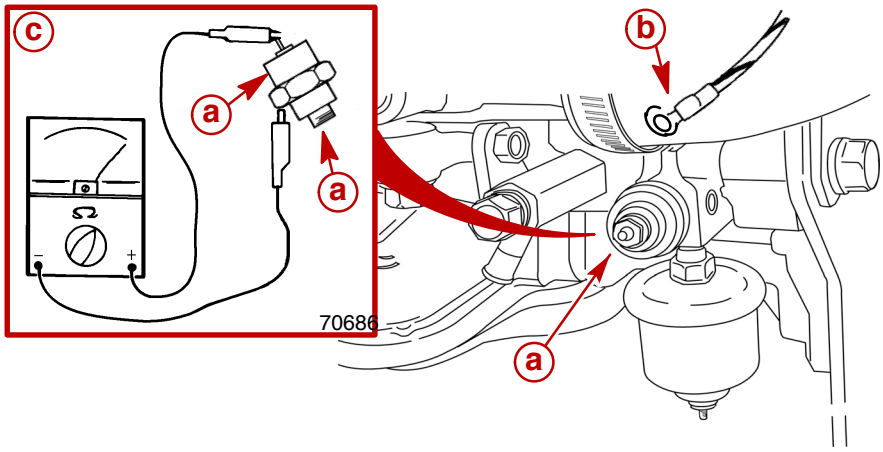

a - Oil Pressure Audio Warning Switch
b - YEL/BLU Wire
c - Continuity Meter And Connection Points

OIL PRESSURE kPa (psi)	SWITCH CONDITION
0 (0)	Closed
52 (7.5)	Open

REMOVAL

1. Remove YEL/BLU harness wire from oil pressure switch.
2. Remove oil pressure switch.

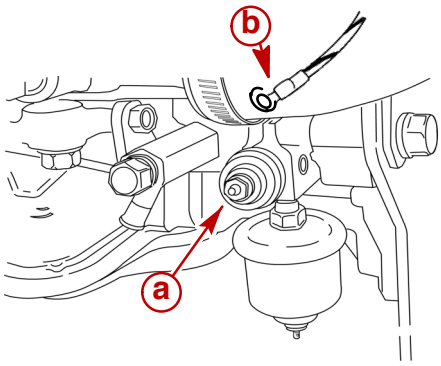

a - Oil Pressure Audio Warning Switch
b - YEL/BLU Wire

INSTALLATION

1. Lightly coat threads of oil pressure switch with Loctite Pipe Sealant with Teflon. Install. and torque.

Description	Where Used	Method of Use	Part Number
Loctite Pipe Sealant with Teflon	Switch	Apply to threads	Obtain Locally

Description		Nm	lb-in.	lb-ft
Switch, Oil Pressure	NPTF 1/8 in.	12.7	113	

2. Connect harness wire and seal with Liquid Neoprene.
3. Connect battery cables to battery.

Coolant Temperature (Overheat) Switch

When engine is COLD the audio warning coolant temperature (overheat) switch circuit is normally open.

REMOVAL

1. Drain coolant from closed cooling system.
2. Remove YEL/RED harness wire from coolant temperature switch.

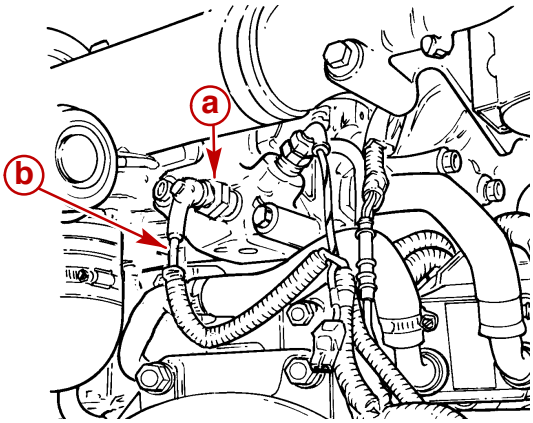

77355

a - Coolant Temperature Switch
b - YEL/RED Harness Wire

3. Remove coolant temperature switch.

TESTING

NOTICE
Read WARNING about switch and sender testing in Precautions at front of this section before proceeding with tests.

1. With engine COLD, remove harness wire from switch terminal.
2. Connect a continuity meter between switch terminal and switch hex (case).
   a. No continuity should exist.
   b. If continuity exists, replace switch.

3. Test switch circuit for closing (sound alarm), as if coolant temperature rises above operating specifications, as follows:
   a. Using suitable jumper leads connect alarm ground (–) terminal to switch terminal.
   b. Using suitable jumpers and being careful to avoid short circuits, connect the negative (–) of a 12 volt power source to sender case and the positive (+) to the "+" on the alarm.

⚠ WARNING

Use only clean, dry sand such as used for general sandblasting purposes. Use of sand containing contaminants could result in hazards such as fire, short circuiting, hot-spots, or other hazards.

   c. Using suitable container, thermometer and heat source, suspend switch with tip in sand.
   d. Heat sand and observe temperature on thermometer.
   e. Replace switch if it does not close (sound alarm) within the range of temperatures indicated in chart.

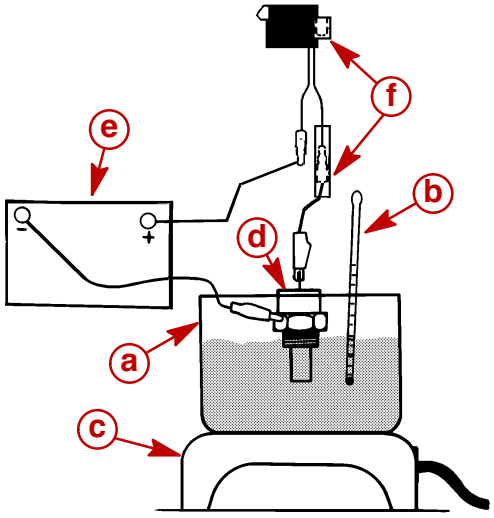

77380

a - Suitable Container
b - Thermometer
c - Heat Source
d - Coolant Temperature Switch
e - 12 Volt Power Source And Jumper Leads
f - Audio Warning Alarm With Jumper Lead

TEST TEMPERATURE	SWITCH CONDITION
102 - 106° C (215 - 220° F)	Closed

   f. Turn heat source OFF. Allow sand and components to cool.

INSTALLATION

1. When replacing switch, coat threads with Loctite Pipe Sealant with Teflon and install. Torque switch.

Description		Nm	lb-in.	lb-ft
Switch, Coolant Temperature	NPTF 1/2 in.	12.7	113	

2. Connect harness wire and seal with liquid neoprene.
3. Connect battery cables to battery.
4. Refill closed cooling system.

Remote Control / Neutral Start Safety Circuit

Primary Station

⚠ WARNING

Avoid injury or property damage. Starting an engine while the sterndrive unit or transmission is in gear could cause severe injury to people or animals in or near the boat, or property damage due to unexpected operation. Special circuitry and switches are necessary and must be used to prevent accidental starter engagement and subsequent engine operation while a sterndrive or transmission is in a gear.

STERNDRIVE (MCM) MODELS

Ensure neutral start safety circuit remote control connections are made before use. Refer to Wiring Diagrams.

IMPORTANT: The two bullet connectors on primary station harness YEL/RED wire, as shipped from the factory, have to be disconnected and reconnected to Neutral Start Safety Circuit wires from the remote control.

1. Disconnect the two YEL/RED bullet connectors.
2. Connect the YEL/RED wires from the Remote Control Neutral Start Safety Circuit to the YEL/RED wires disconnected in Step 1.

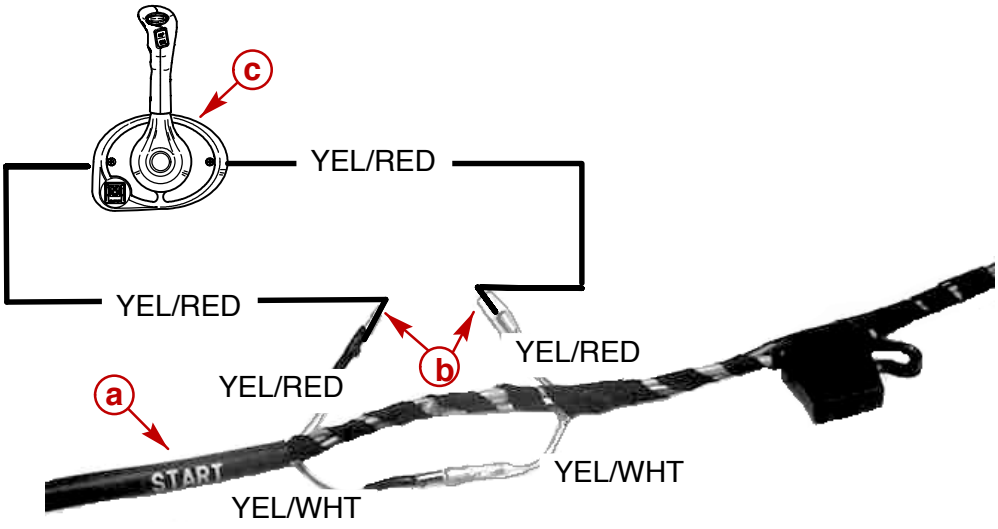

Typical

a- START Wires Of Instrument Harness
b- YEL/RED Wires
c- Remote Control / Neutral Start Safety Circuit

Secondary Station

⚠ WARNING

Avoid injury or property damage. Starting an engine while the sterndrive unit or transmission is in gear could cause severe injury to people or animals in or near the boat, or property damage due to unexpected operation. Special circuitry and switches are necessary and must be used to prevent accidental starter engagement and subsequent engine operation while a sterndrive or transmission is in a gear.

STERNDRIVE (MCM) MODELS

IMPORTANT: The two bullet connectors on the YEL/RED wire must be disconnected. Also, the two bullet connectors on the YEL/WHT wire must be disconnected. After doing so, connect female YEL/WHT terminal and male YEL/RED terminal to Neutral Start Safety Circuit wires from remote control. Leave the other two connectors disconnected.

1. Disconnect the two bullet connectors on the YEL/RED wire.
2. Disconnect the two bullet connectors on the YEL/WHT wire.
3. Connect female YEL/WHT terminal and male YEL/RED terminal to neutral start safety circuit wires from remote control.

NOTE: *Leave the male YEL/WHT and female YEL/RED terminals disconnected. Keep wires separated. Tape each wire separately with at least two layers of electrical tape.*

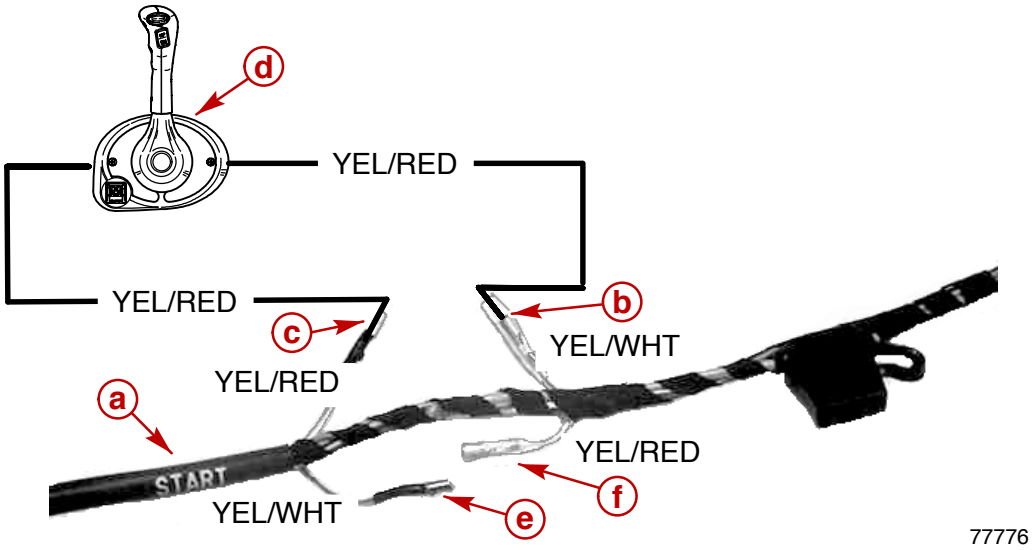

a - START Wires Of Instrument Harness
b - Female YEL/WHT Terminal
c - Male YEL/RED Terminal
d - Remote Control / Neutral Safety Start Circuit
e - Male YEL/WHT Disconnected
f - Female YEL/RED Disconnected

THIS PAGE IS INTENTIONALLY BLANK

THIS PAGE IS INTENTIONALLY BLANK

ELECTRICAL SYSTEM

Section 4E - Wiring Diagrams

Table of Contents

4
E

THIS PAGE IS INTENTIONALLY BLANK

Wire Color Abbreviations

BLK	Black		PUR or PPL	Purple
BLU	Blue		RED	Red
BRN	Brown		TAN	Tan
GRY	Gray		WHT	White
GRN	Green		YEL	Yellow
ORN	Orange		LIT or LT	Light
PNK	Pink		DRK	Dark

Lubricants / Sealants / Adhesives

Description	Part Number
Liquid Neoprene	92-25711--2

Tools

Description	Part Number
DVOM	J-34029-A or Equivalent

General Information

NOTE: *If using other than Quicksilver instrumentation and harnesses, refer to manufacturers' instructions.*

Engine Wiring

D1.7L DTI Sterndrive (MCM)

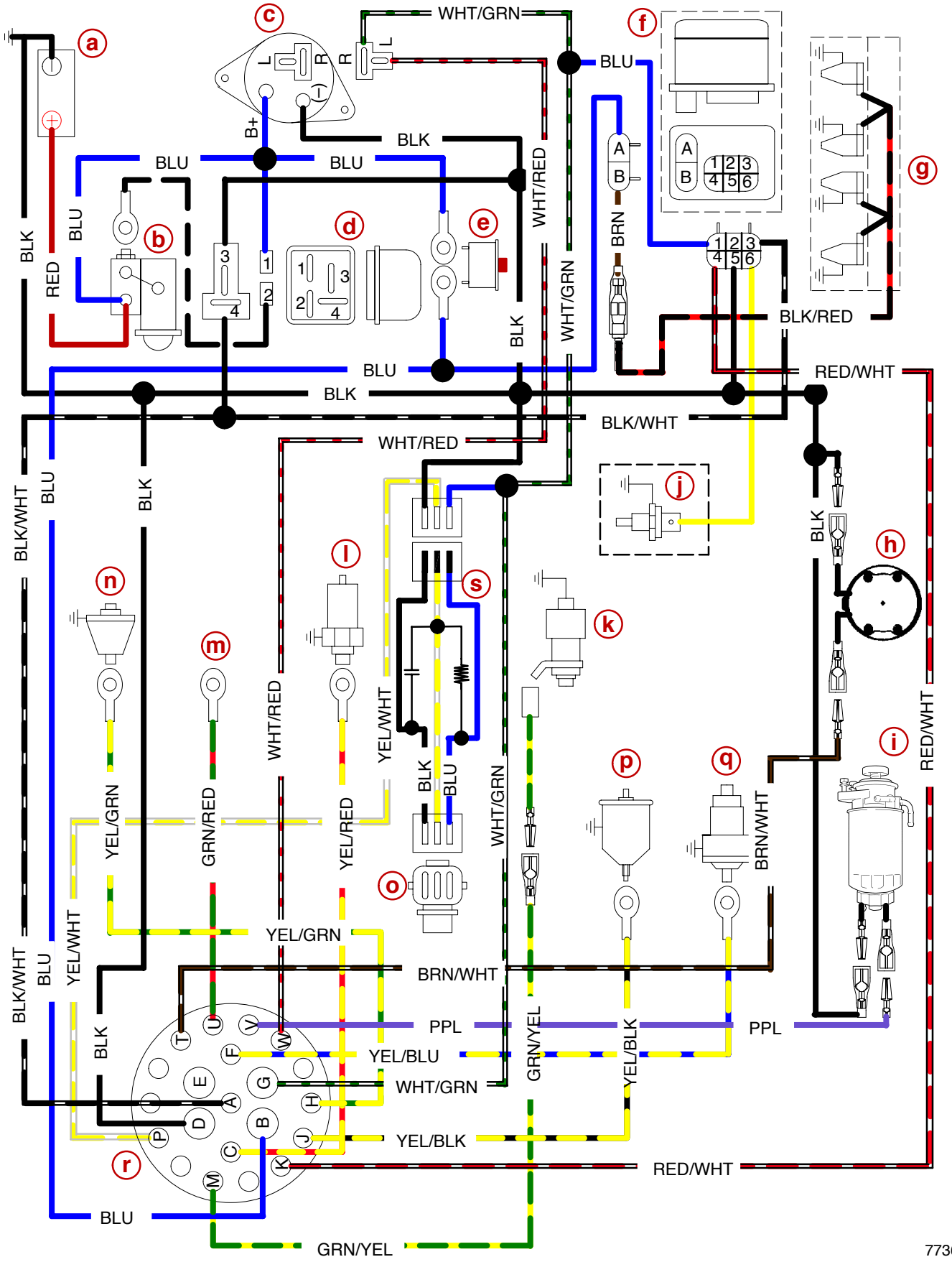

D1.7L DTI Sterndrive (MCM) Engine Wiring - (Continued)

a - Battery
b - Starter
c - Alternator
d - Start Relay
e - Circuit Breaker
f - Glow Plug Relay (Option)
g - Glow Plug Harness (Option)
h - Trim Position Sender
i - Water In Fuel Sensor
j - Glow Plug Temperature Sensor (Option)
k - Engine Stop Solenoid
l - Cooland Temperature Switch
m - (Not Used)
n - Coolant Temperature Sender
o - Tachometer Sensor
p - Oil Pressure Sender
q - Oil Pressure Switch
r - Harness Connector
s - Tachometer Signal Amplifier

ENGINE / EXTENSION HARNESS CONNECTOR

NOTE: *Refer to Item "**r**."*

Terminal Letter	Wire Color Code	Terminal Letter	Wire Color Code	Terminal Letter	Wire Color Code
A	BLK/WHT	H	YEL/GRN	R	(Not Used)
B	BLU	J	YEL/BLK	S	(Not Used)
C	YEL/RED	K	RED/WHT	T	BRN/WHT
D	BLK	L	(Not Used)	U	(Not Used)
E	(Not Used)	M	GRN/YEL	V	PPL
F	YEL/BLU	N	(Not Used)	X	(Not Used)
G	WHT/GRN	P	YEL/WHT	W	WHT/RED

Instrumentation Wiring

D1.7L DTI - Basic Panel

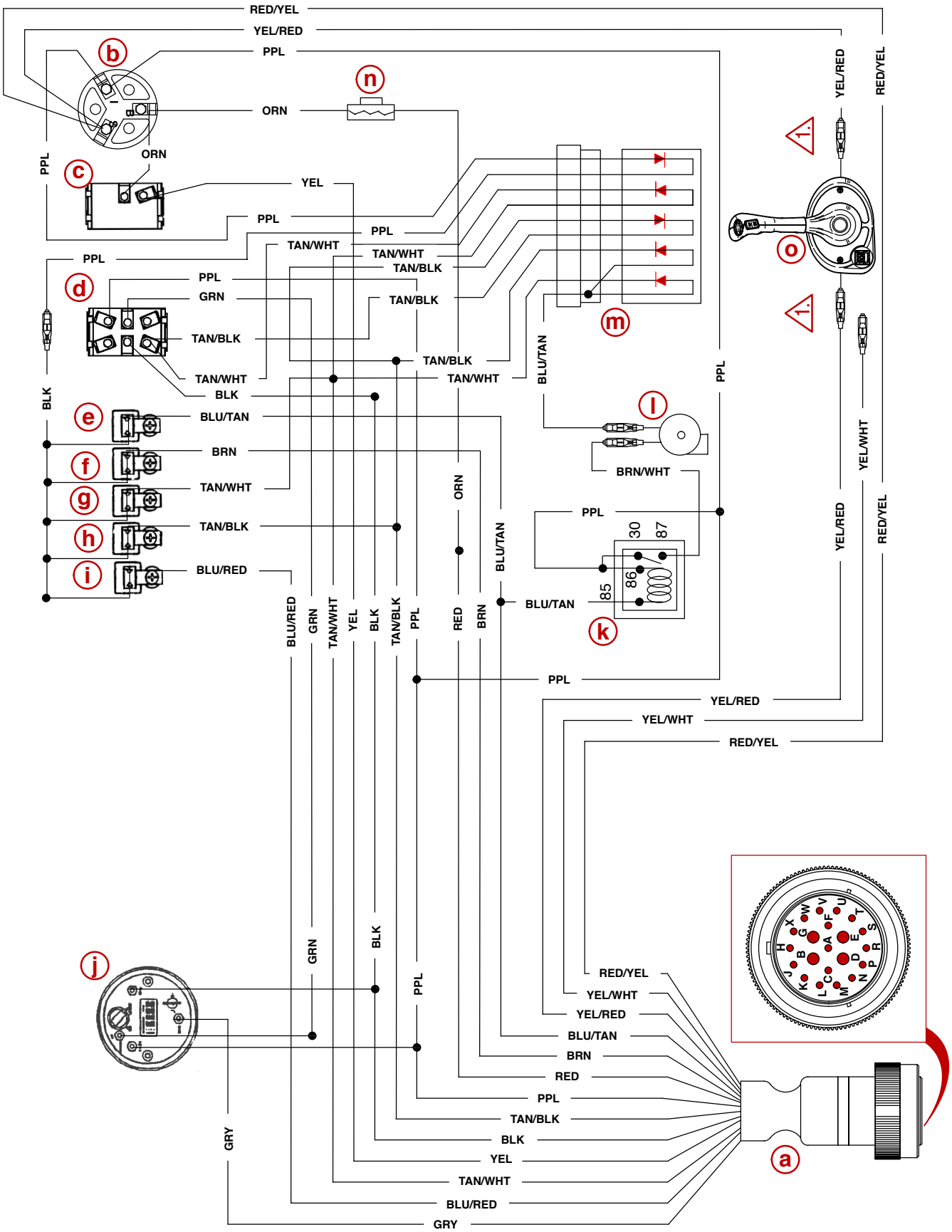

D1.7L DTI - Basic Panel (Continued)

DESCRIPTIONS

a - Instrument/Extension Harness Connection
b - Key Switch
c - Engine Stop Switch
d - Panel Lights / Audio Warning Test Switch
e - Preheat Indicator Lamp
f - Charge Indicator Lamp
g - Oil Pressure Warning Lamp
h - Coolant Temperature Warning Lamp
i - Water In Fuel Warning Lamp
j - Tachometer
k - Audio Warning Relay Delay (During Pre-heat)
l - Audio Warning Alarm
m - Diode Pack
n - 20 Amp Fuse
o - Remote Control

1. Bullet connectors shown. Alternately connect wires together with ring terminals using screws and hex nuts. Apply liquid neoprene to connections and slide rubber sleeves over connections.

INSTRUMENT / EXTENSION HARNESS CONNECTOR

NOTE: *Refer to Item "a".*

Terminal Letter	Wire Color Code	Terminal Letter	Wire Color Code	Terminal Letter	Wire Color Code
A	YEL/RED	H	(NOT USED)	R	YEL/WHT
B	RED	J	(NOT USED)	S	(NOT USED)
C	TAN/BLK	K	BLU/TAN	T	(NOT USED)
D	BLK	L	(NOT USED)	U	(NOT USED)
E	(NOT USED)	M	YEL	V	BLU/RED
F	TAN/WHT	N	(NOT USED)	X	RED/YEL
G	PPL	P	GRY	W	BRN

D1.7L DTI - Optional Panel

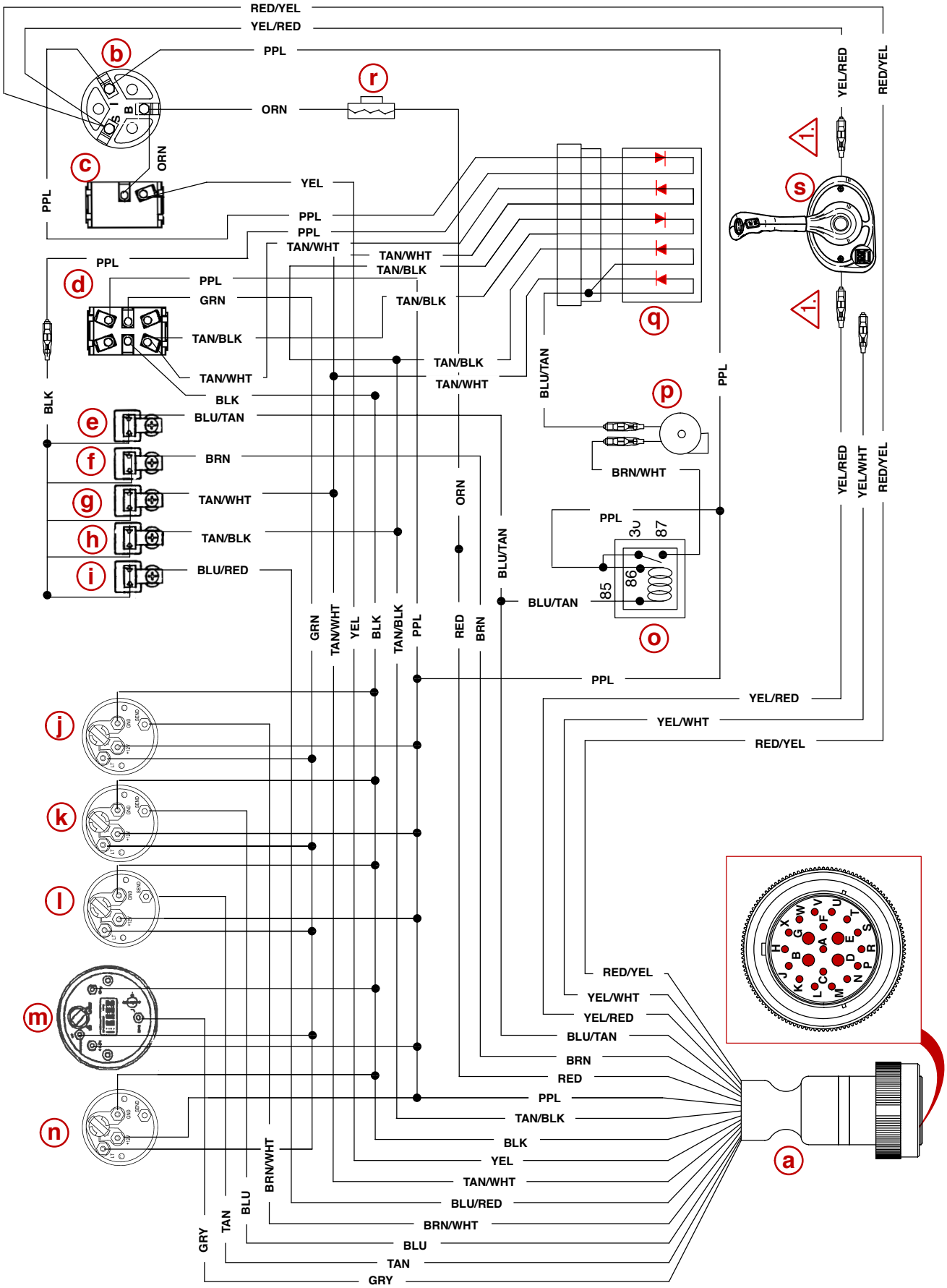

D1.7L DTI - Optional Panel (Continued)

DESCRIPTIONS

a - Instrument/Extension Harness Connection
b - Key Switch
c - Engine Stop Switch
d - Panel Lights / Audio Warning Test Switch
e - Preheat Indicator Lamp
f - Charge Indicator Lamp
g - Oil Pressure Warning Lamp
h - Coolant Temperature Warning Lamp
i - Water In Fuel Warning Lamp
j - Voltmeter
k - Coolant Temperature Gauge
l - Trim Gauge
m - Tachometer
n - Oil Pressure Gauge
o - Audio Warning Relay Delay (During Pre-heat)
p - Audio Warning Alarm
q - Diode Pack
r - 20 Amp Fuse
s - Remote Control

1. Bullet connectors shown. Alternately connect wires together with ring terminals using screws and hex nuts. Apply liquid neoprene to connections and slide rubber sleeves over connections.

INSTRUMENT / EXTENSION HARNESS CONNECTOR

NOTE: *Refer to Item "a."*

Terminal Letter	Wire Color Code	Terminal Letter	Wire Color Code	Terminal Letter	Wire Color Code
A	YEL/RED	H	TAN	R	YEL/WHT
B	RED	J	BLU	S	(NOT USED)
C	TAN/BLK	K	BLU/TAN	T	(NOT USED)
D	BLK	L	(NOT USED)	U	(NOT USED)
E	(NOT USED)	M	YEL	V	BLU/RED
F	TAN/WHT	N	(NOT USED)	X	RED/YEL
G	PPL	P	GRY	W	(NOT USED)

D1.7L DTI - Quicksilver Instrumentation Package

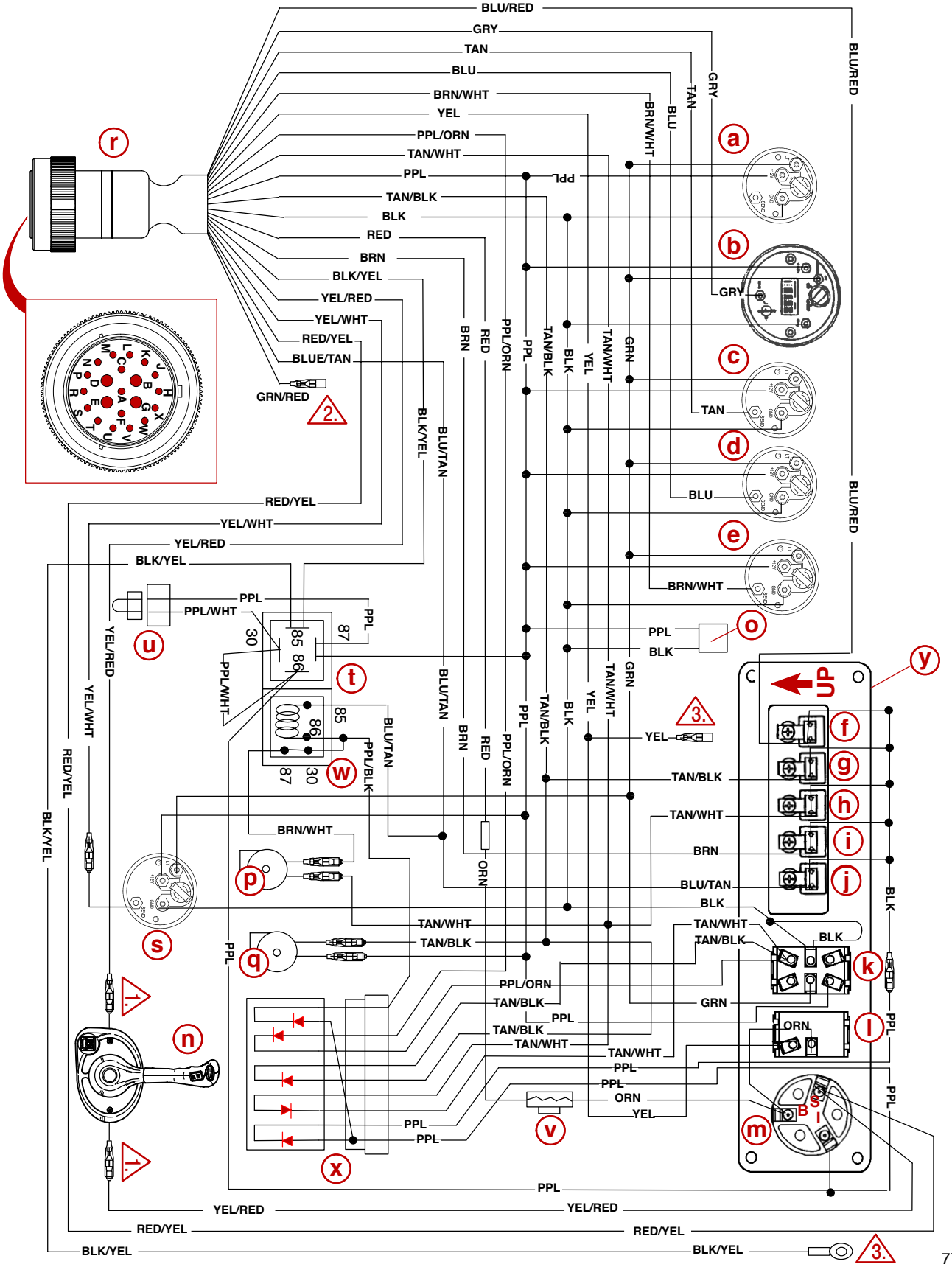

D1.7L DTI - Quicksilver Instrument Package (Continued)

a - Voltmeter Gauge
b - Tachometer Gauge
c - Coolant Temperature Gauge
d - Oil Pressure Gauge
e - Trim Position Gauge
f - Water In Fuel Lamp
g - Coolant Temperature Lamp
h - Oil Pressure Lamp
i - Charge Indicator Lamp
j - Preheat Indicator Lamp
k - Panel Lights/Audio Warning Test Switch
l - Engine Stop Switch
m - Key Switch
n - Neutral Start Safety Circuit Remote Control
o - Spare Wires (Optional Hour Meter Gauge)
p - Audio Warning Alarm- Oil
q - Audio Warning Alarm - Temperature
r - Instrument/Extension Harness Connector (21-Pin Deutsch™)
s - Fuel Gauge (Optional)
t - Connector With Relay (If Second Station Equipped)
u - Connector Jumper (If Single Station Only)
v - 20 Amp Fuse
w - Audio Warning Suppression Relay (During Pre-Heat)
x - Diode Pack
y - Engine System Monitor Panel

1. Bullet connectors shown. Alternately, if equipped, connect wires together with ring terminals using screws and hex nuts. Apply Liquid Neoprene to connections and slide rubber sleeves over connections.

2. Spare wire.

3. Keep wires separated. Not used on this model. Tape each wire separately with at least two layers of electrical tape.

INSTRUMENT / EXTENSION HARNESS CONNECTOR

NOTE: *Refer to Item "**r**."*

Terminal Letter	Wire Color Code	Terminal Letter	Wire Color Code	Terminal Letter	Wire Color Code
A	YEL/RED	H	TAN	R	YEL/WHT
B	RED	J	LT BLU	S	ORN
C	TAN/BLK	K	BLU/TAN	T	BRN/WHT
D	BLK	L	BLK/YEL	U	(NOT USED)
E	GRN/RED	M	YEL	V	BLU/RED
F	TAN/WHT	N	PPL/ORN	X	RED/YEL
G	PPL	P	GRY	W	BRN

THIS PAGE IS INTENTIONALLY BLANK

FUEL SYSTEM

Section 5A - Fuel Filter

Table of Contents

5
A

THIS PAGE IS INTENTIONALLY BLANK

Specifications

Torque

IMPORTANT: Listed below are the torque specifications for those fasteners which have a specific torque value. Tighten all other fasteners to nominal torque values given in SECTION 3A.

Description		Nm	lb-in.	lb-ft
Bolt, Filter Bracket	M8 x 1.25 25 mm (1 in.) Long	19	168	
Bolt, Lower Manifold Bracket	M8 x 1.25 25 mm (1 in.) Long	19	168	
Bolt, Upper Manifold Bracket	M8 x 1.25 30 mm (1-3/16 in.) Long	19	168	

Lubricants / Sealants / Adhesives

Description	Where Used	Method of Use	Part Number
Engine Oil	Filter Sealing Ring	Light Coating	Obtain Locally

Fuel Filter

Description	Specification
Filtering Area	0.18 m^2
Rated Flow	1.2 L/min. (0.3 U.S. gal/min.)
Sedimented Water Volume	0.15 L (5 U.S. fl. oz.)

Precautions

⚠ WARNING

FIRE HAZARD: Fuel leakage from any part of the fuel system can be a fire hazard which can cause serious bodily injury or death. Careful periodic inspection of entire fuel system is mandatory, particularly after storage. All fuel components including fuel tanks, whether plastic, metal or fiberglass, fuel lines, primers, fittings, and fuel filters should be inspected for leakage, softening, hardening, swelling or corrosion. Any sign of leakage or deterioration requires replacement before further engine operation.

⚠ WARNING

Always disconnect battery cables from battery BEFORE working on fuel system to prevent fires. This eliminates the engine wiring as a potential source of ignition.

⚠ WARNING

Be careful when changing fuel system components; diesel fuel is flammable. Be sure that ignition key is OFF. DO NOT smoke or allow sources of open flame in the area while changing fuel system components. Wipe up any spilled fuel immediately. DO NOT allow fuel to come into contact with any hot surface which may cause it to ignite.

⚠ WARNING

Dispose of fuel soaked rags, paper, etc. in an appropriate air tight, fire retardant container. Fuel soaked items may spontaneously ignite and result in a fire hazard which could cause serious bodily injury or death.

⚠ WARNING

Make sure no leaks exist before closing engine hatch.

⚠ CAUTION

***ENVIRONMENTAL HAZARD!* Discharge of fuel or fuel waste into the environment is restricted by law. Do not spill fuel or fuel waste into the environment when using or servicing boat. Contain and dispose of fuel or fuel waste as defined by local authorities.**

Exploded View - Fuel Filter and Related Parts

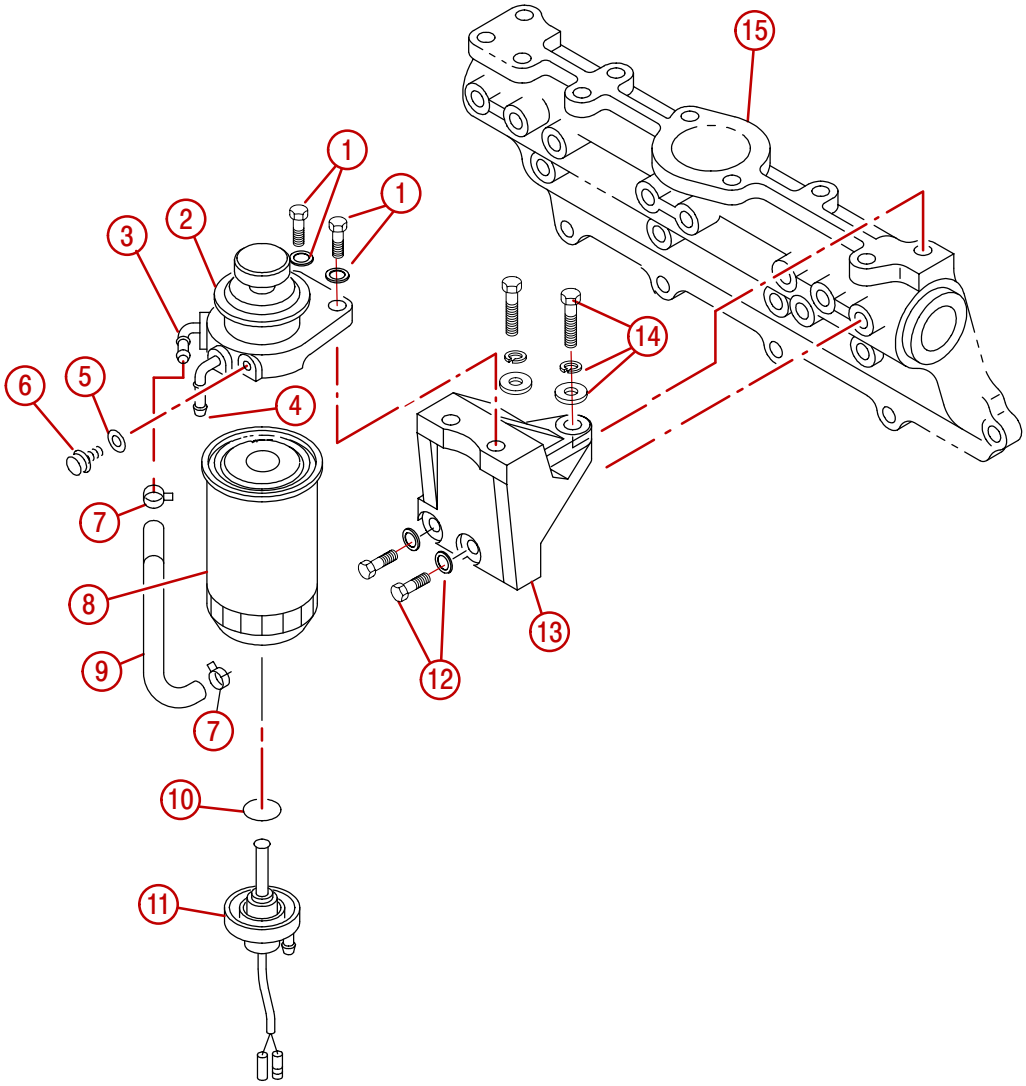

77381

1 - Filter Bracket Bolt, M8 x 25 mm (1 in.) Long, With Lock Washer
2 - Filter Bracket
3 - Fuel Return Fitting
4 - Fuel Inlet Fitting
5 - Gasket
6 - Bleeder
7 - Hose Clamp
8 - Filter Element
9 - Fuel Return Line
10 - O-ring
11 - Drain Cap, With Water In Fuel Warning Probe
12 - Manifold Bracket Lower Bolt, M8 x 25 mm (1 in.) Long, With Lock Washer
13 - Manifold Bracket
14 - Manifold Bracket Upper Bolt, M8 x 30 mm (1-3/16 in.) Long, With Plain and Lock Washer
15 - Intake Manifold

Filter

Draining

NOTICE
Read Precautions at front of this SECTION before proceeding.

NOTE: *To ensure complete draining, in warm weather, drain before daily operation. In cold weather, when there is a possibility that the condensed water will freeze, ensure the filter is drained shortly after the end of operation.*

1. Install a hose on drain cap fitting.
2. Place a suitable container under fuel filter to catch contaminated fuel and/or water.
3. Open drain at bottom of filter approximately 5 turns.
4. Move plunger knob on pump/primer up and down repeatedly, about 10 times until approximately 4 ml. (2 fl oz.) is drained or until fuel appears clear.

IMPORTANT: If fuel filter requires frequent draining, the fuel tank should be drained to remove water.

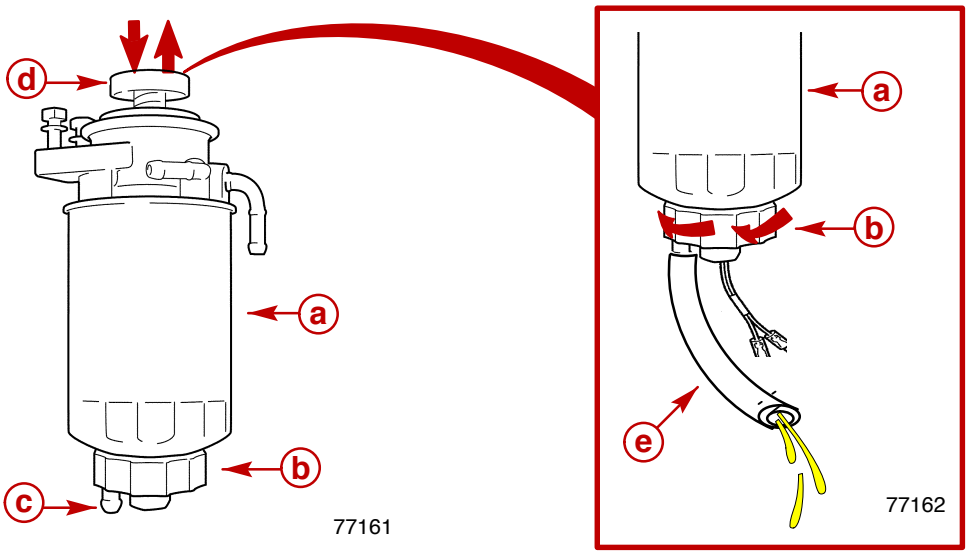

a - Fuel Filter
b - Drain Cap
c - Fitting
d - Pump/Primer
e - Hose

5. Close drain cap. Tighten securely.
6. Fill fuel filter.
7. Remove hose and container.
8. Dispose of waste fuel as defined by local authorities.
9. Start engine, check for fuel leaks. If leaks exist stop engine immediately. Recheck installation.

Removal

1. Place a suitable container under fuel filter to catch fuel.
2. Remove water separating fuel filter and sealing ring.

NOTE: *Loosen filter by turning it counterclockwise with a filter wrench.*

IMPORTANT: Filter cannot be cleaned and reused. It must be replaced

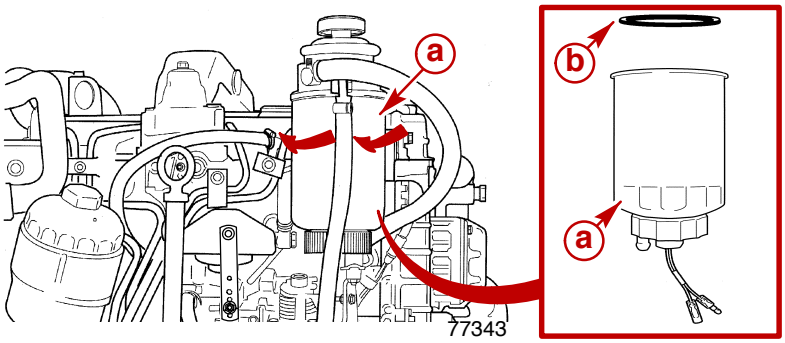

77128

a - Fuel Filter
b - Sealing Ring

3. Remove the drain cap and O-ring from the filter.

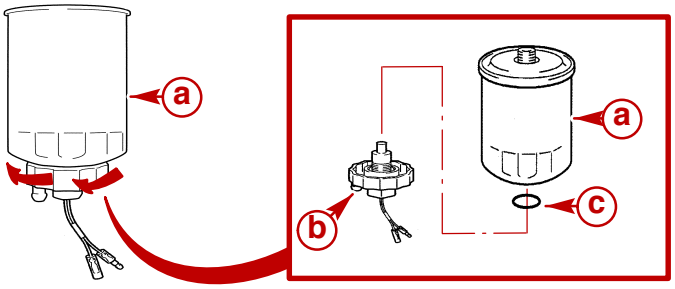

77128

a - Fuel Filter
b - Drain Cap
c - O-ring

4. Retain the drain cap and discard the O-ring.
5. Discard the used filter and sealing ring.
6. Dispose of waste fuel as defined by local authorities.

Cleaning

1. Clean sealing surfaces on new filter.
2. Clean sealing surface on filter bracket.

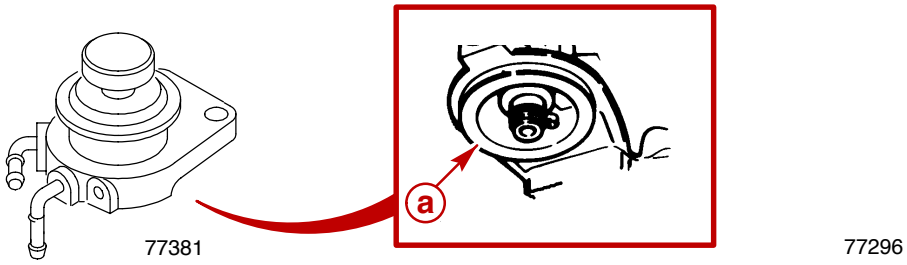

Typical

a - Filter Sealing Surface

Inspection

1. Inspect sealing surfaces for nicks and scratches.
2. Replace or repair parts as necessary.

Installation

1. Lightly coat sealing ring surface on new filter with clean engine oil.

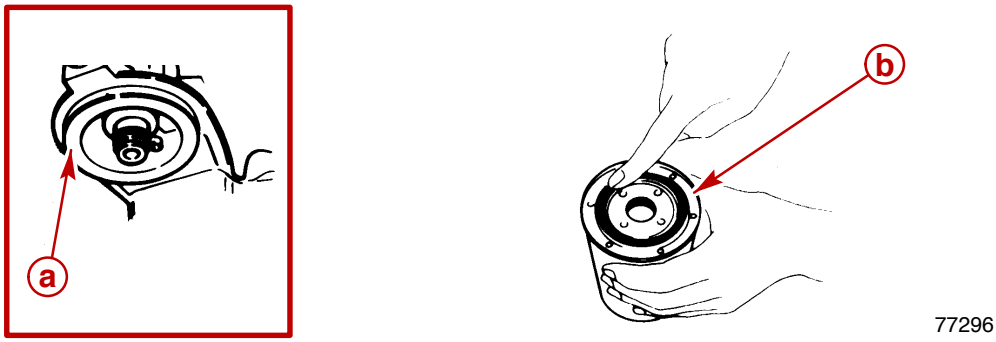

Typical

a - Filter Sealing Surface
b - Sealing Ring

Description	Where Used	Method of Use	Part Number
Engine Oil	Filter Sealing Ring	Light coat on surface	Obtain Locally

2. Install O-ring on drain cap.
3. Install the O-ring and drain cap on the new fuel filter. Tighten drain cap.

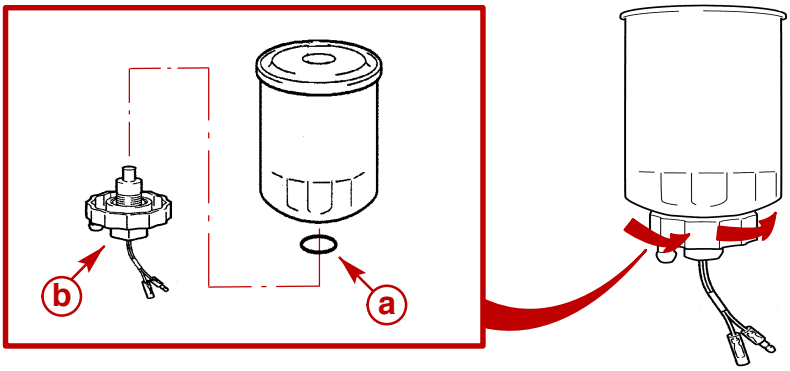

77128

a - O-ring
b - Drain Cap

4. Thread the filter onto the bracket until the sealing ring contacts the bracket.
5. Tighten the fuel filter an additional 2/3 of a turn with a filter wrench.
6. Ensure that drain cap is securely tightened.
7. Connect water in fuel sensor wires to engine harness wires.

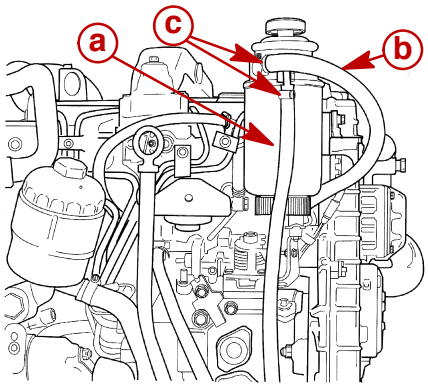

77343

a - Fuel Supply Line
b - Fuel Return Line
c - Hose Clamp

8. Fill fuel filter. Check filter and drain cap for fuel leaks.
9. Start engine, check for fuel leaks. If leaks exist stop engine immediately. Recheck installation.
10. Ensure water in fuel lamp is OFF. If lamp is not OFF, test water in fuel warning system.

Filter Bracket

Removal

1. Place a suitable container under fuel filter to catch fuel.
2. Close fuel shut off valve, if equipped. Alternately, disconnect and plug fuel supply and return lines.
3. Remove water separating fuel filter.
4. Remove bolts retaining filter bracket to manifold bracket.
5. Remove bolts retaining manifold bracket to intake manifold.

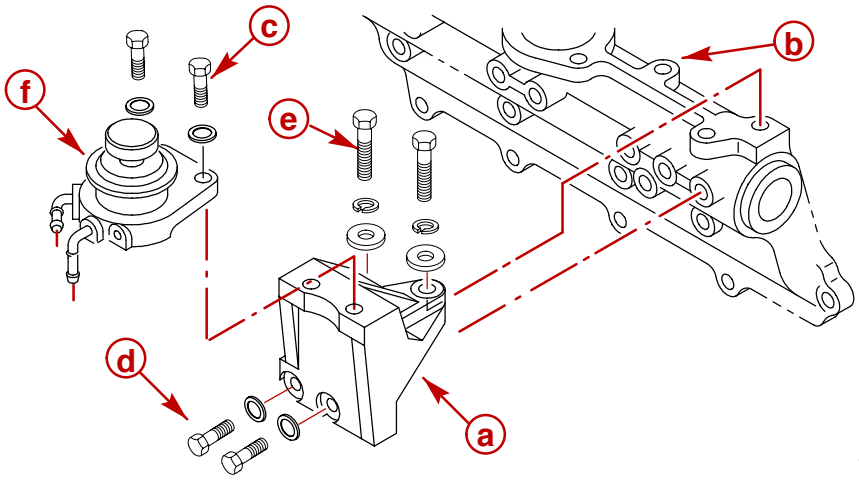

a - Manifold Bracket
b - Intake Manifold
c - Filter Bracket Bolt With Lock Washer
d - Manifold Bracket Lower Bolt With Lock Washer
e - Manifold Bracket Upper Bolt With Lock and Plain Washer
f - Filter Bracket

6. Dispose of waste fuel as defined by local authorities.

Inspection

1. Inspect sealing surfaces for nicks and scratches.
2. Replace or repair parts as necessary.

Cleaning

1. Wash parts in clean diesel fuel and dry with compressed air.
2. Clean mounting surfaces.
3. Clean filter sealing surface on filter bracket.

Installation

1. Install manifold bracket to intake manifold. Torque bolts.
2. Install filter bracket to manifold bracket. Torque bolts.

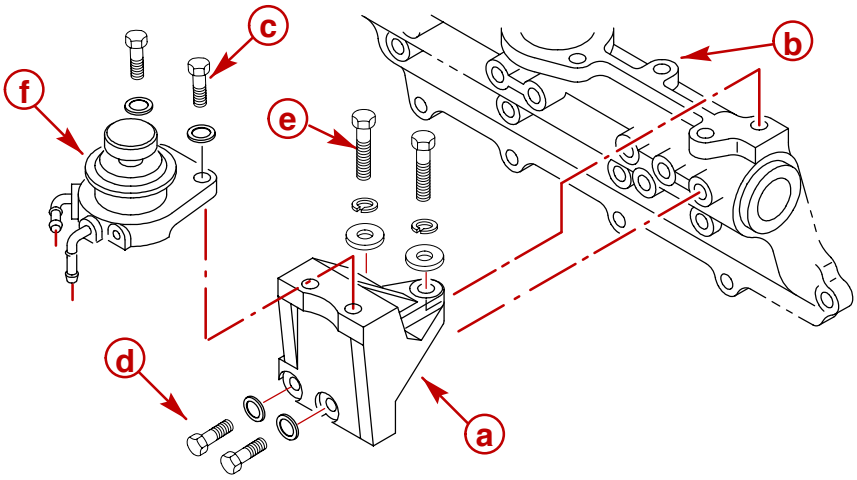

a - Manifold Bracket
b - Intake Manifold
c - Filter Bracket Bolt With Lock Washer
d - Manifold Bracket Lower Bolt With Lock Washer
e - Manifold Bracket Upper Bolt With Lock and Plain Washer
f - Filter Bracket

Description		Nm	lb-in.	lb-ft
Bolt, Filter Bracket	M8 x 1.25	19	168	
Bolt, Lower, Manifold Bracket	M8 x 1.25	19	168	
Bolt, Upper, Manifold Bracket	M8 x 1.25	19	168	

3. Install fuel filter and drain cap.
4. Open fuel shut off valve, if equipped. Alternately, unplug and connect fuel supply and return lines. Clamp securely.

Filling

Filter

Follow this procedure after installing a new filter or if fuel has been completely drained from filter.

1. Place a suitable container under fuel filter to catch fuel.
2. Loosen, DO NOT REMOVE, bleeder screw on filter bracket.
3. Move plunger knob on pump/primer up and down repeatedly, until an air free stream of fuel flows from bleeder screw. Filter is full when this occurs.
4. Tighten bleeder screw.
5. Keep moving plunger knob until some added resistance is noticed when knob is moved.

⚠ CAUTION

Avoid the risks of fuel leaking. The bleeder screw uses a gasket (sealing washer) to prevent fuel from leaking. Replace this gasket as needed.

6. Check bleeder for fuel leaks.

NOTE: *Bleeder screw and filter assembly shown removed for visual clarity only.*

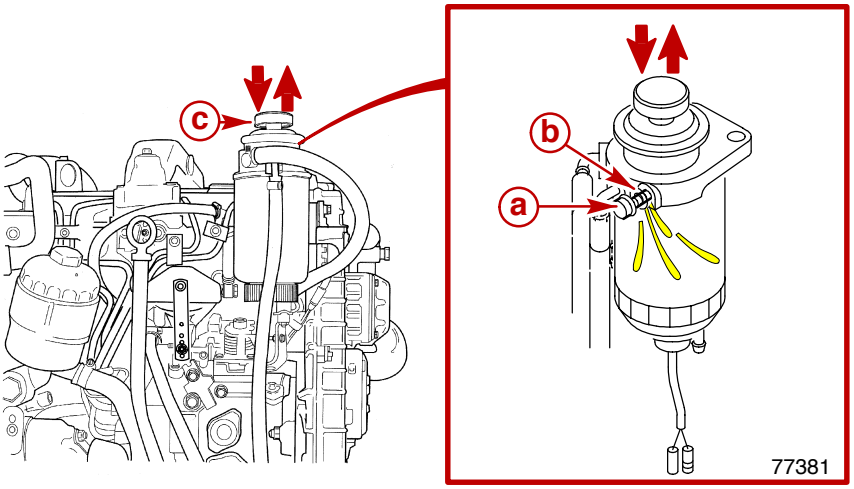

77343

a - Bleeder Screw
b - Gasket
c - Pump / Primer Knob

7. Dispose of waste fuel as defined by local authorities.
8. Start engine, check for fuel leaks. If leaks exist stop engine immediately. Recheck installation.
9. If engine does not readily start, refer to Filling - Fuel System.

Fuel System

Follow this procedure if entire fuel system has been completely drained due to service.

1. Fill the fuel filter as outlined previously.
2. Place a suitable container under fuel injection pump to catch fuel.
3. Remove and plug boat fuel return hose from injection pump return fuel fitting.

⚠ CAUTION

Avoid the risks of fuel leaking. The injection pump fuel return valve, a special hollow bolt, uses sealing washers to prevent fuel from leaking. Replace the sealing washers if leaking.

4. To avoid spilling fuel, temporarily install a length of fuel hose on the fitting. Avoid disturbing special hollow bolt and sealing washers.
5. Move plunger knob on pump/primer up and down repeatedly, until an air free stream of fuel flows from temporary hose.
6. Remove temporary hose. Unplug and install boat fuel return line. Clamp hose.
7. Move plunger knob up and down several times until some added resistance is noticed when knob is moved.
8. Check for fuel leaks.

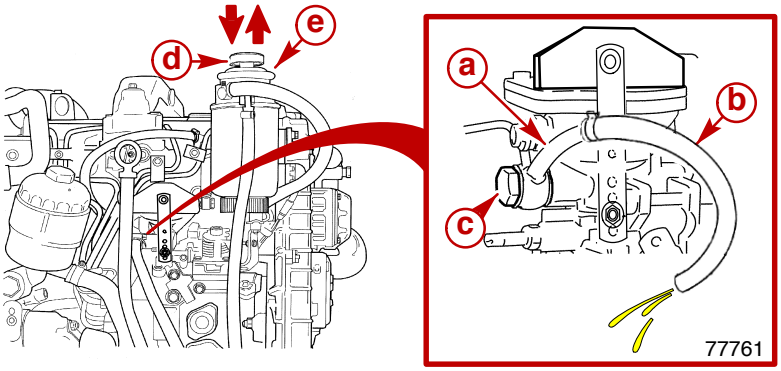

77343

a - Fitting
b - Temporary Hose
c - Hollow Bolt and Sealing Washers
d - Plunger Knob
e - Pump / Primer

9. Dispose of waste fuel as defined by local authorities.
10. Start engine, check for fuel leaks. If leaks exist stop engine immediately. Recheck installation.

NOTE: *In some circumstances, it may be necessary to purge air from the injectors if the engine does not readily start.*

11. If engine does not readily start, refer to SECTION 5B - Bleeding Fuel Injectors.

Water In Fuel Warning System

When equipped with Basic, Optional and Quicksilver instrumentation, a water in fuel warning indicator lamp is provided. The lamp will light when the filter is full, indicating the need to drain the water and sediment from the drain cap.

A water in fuel (WIF) probe, in the fuel filter drain cap, is responsible for activating the warning lamp when water is present in the fuel filter.

Testing

CONTINUITY CHECK

1. Drain fuel filter.
2. Remove drain cap from filter element.
3. Set ohmmeter on R x 1 scale. Connect ohmmeter leads to the drain cap bullet connectors.
4. Ensure black ring on probe is DOWN against cap.
5. If continuity is present, replace drain cap and probe.
6. Raise and hold the black ring UP and check for continuity.
7. If continuity is present, the drain cap and probe are OK.

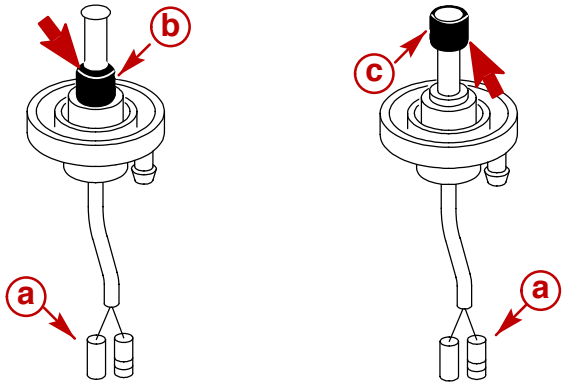

77763

Typical

a - Bullet Connectors
b - Black Ring DOWN - No Continuity
c - Black Ring UP - Continuity

WATER IN FUEL INDICATOR LAMP ON

Refer to the following test charts if malfunction occurs.

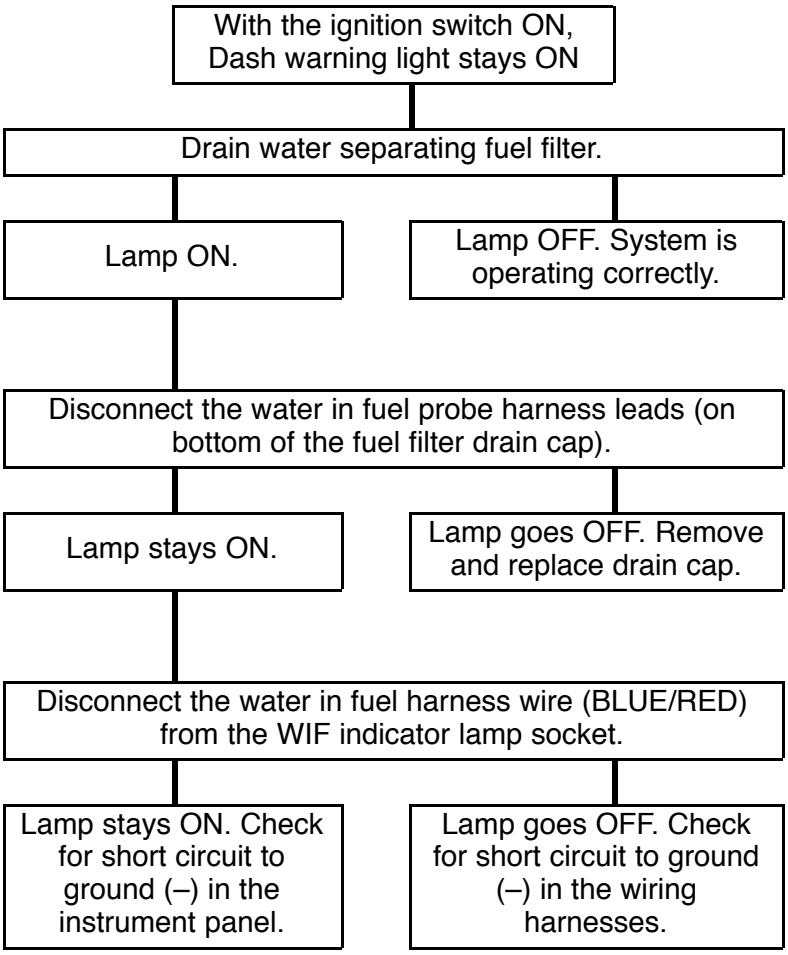

WATER IN FUEL INDICATOR LAMP OFF (WHEN SPECIFIED LEVEL OF WATER IS ATTAINED IN THE DRAIN CAP.)

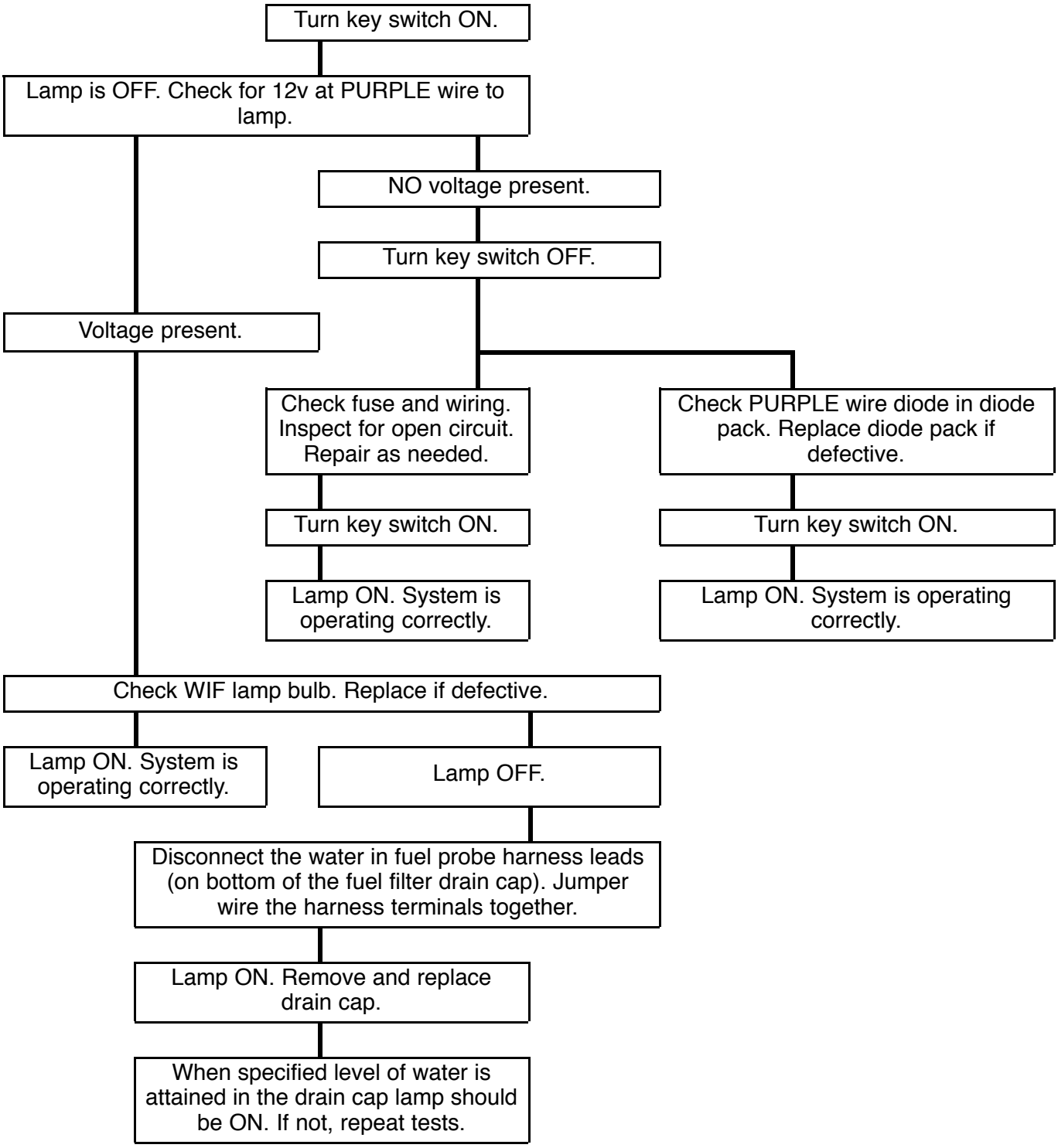

Fuel Flow Diagram

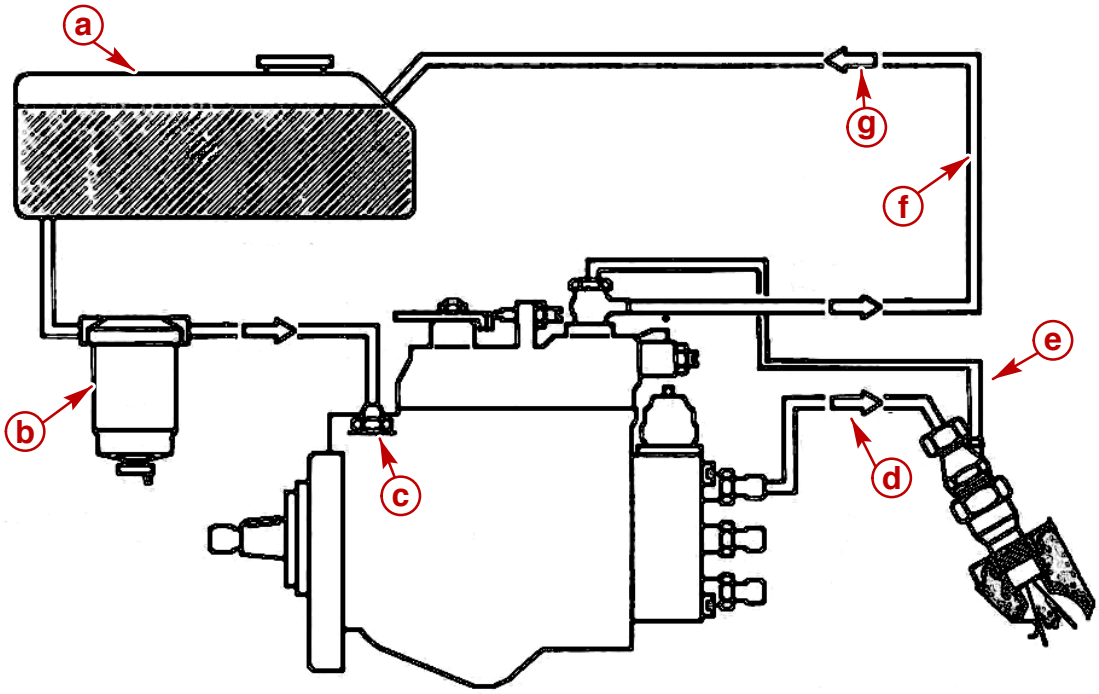

Typical VE Pump

- **a** - Fuel Tank
- **b** - Water Separating Fuel Filter
- **c** - Injection Pump Fuel Inlet
- **d** - Pressurized Fuel To Injector
- **e** - Return Fuel Pipe
- **f** - Fuel Return To Tank
- **g** - Direction Of Flow

THIS PAGE IS INTENTIONALLY BLANK

FUEL SYSTEM

Section 5B - Fuel Injectors

Table of Contents

5
B

THIS PAGE IS INTENTIONALLY BLANK

Identification

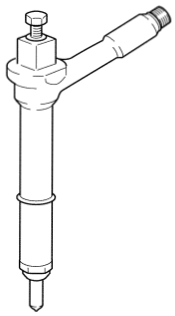

D1.7L DTI Fuel Injector

Specifications

Injector

Description	Specifications
Manufacturer	Delphi
Type of Injector	Multi-Hole 6
Opening Pressure	335 Bar (4857.5 psi)
Spray Angle	70° 34’

Torque

Description		Nm	lb-in.	lb-ft
Nut, Injector Bracket	M10 x 1.25	22		16
Bolt, Hollow, Fuel Pipe To Injector	M8 x 1.0	12.5	111	
Bolt, Fuel Return Pipe Clamp	M6 x 1.0	9.8	87	
Bolt, Hollow, Fuel Return Pipe	M8 x 1.25	15	133	
Nut, Sleeve, Injection Pipe	M12 x 1.5	20		15
Bolt, Lower Bracket	M8 x 1.25	19	168	
Bolt, Bracket	M10 x 1.5	38		28

Lubricants / Sealants / Adhesives

Description	Where Used	Method of Use	Part Number
Engine Oil	Injector O-ring	Coat surfaces	Obtain Locally

Bosch Special Tools

Robert Bosch Corporation 2800 South 25th Avenue Broadview, IL 60153 Mailing Address: P.O. Box 4601 North Suburban, IL 60197 Phone: (312) 865-5200	
Description	**Part Number**
EFEP60H Nozzle Tester	0 681 200 502

Exploded View - Fuel Injector and Related Parts

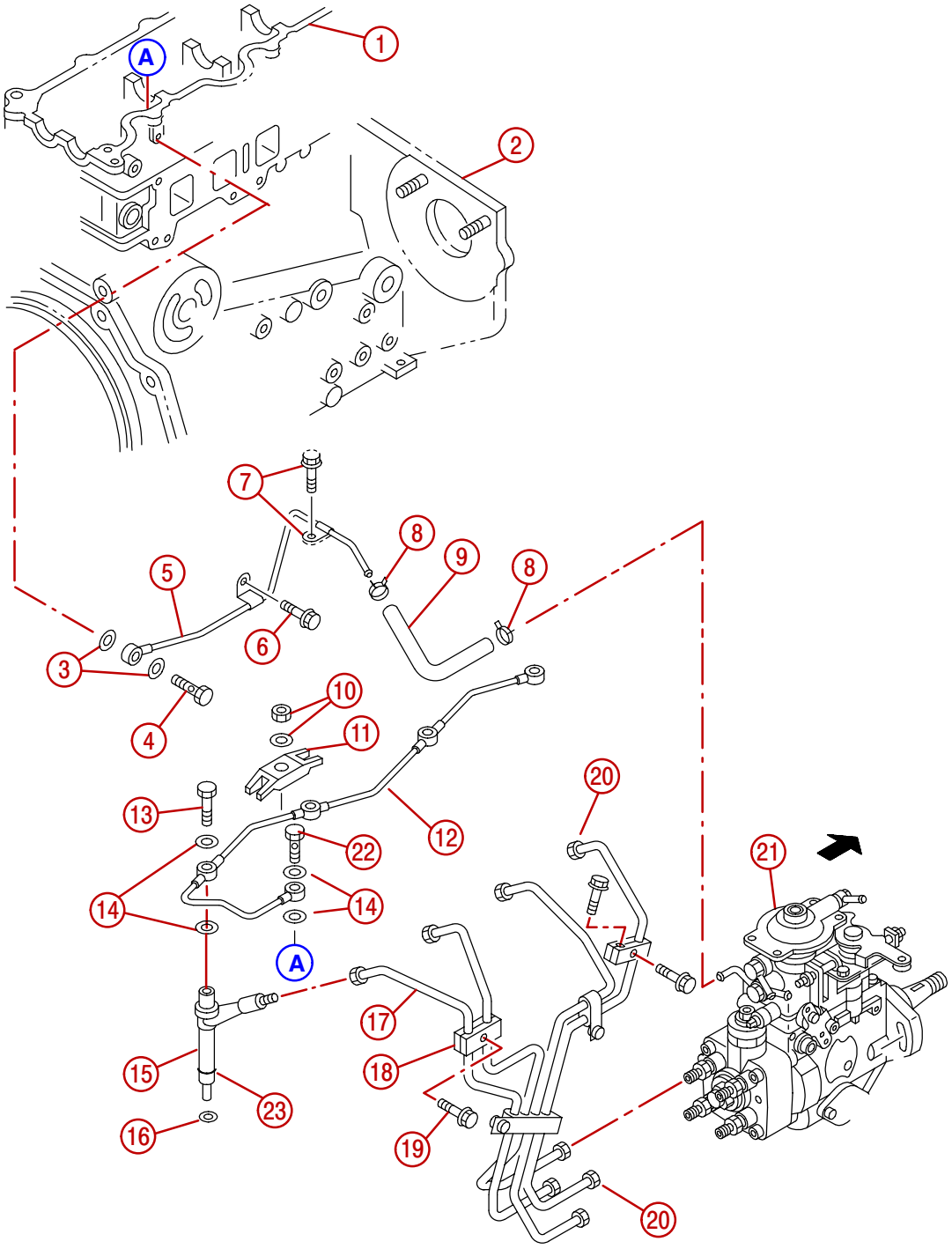

77382

Exploded View - Fuel Injector and Related Parts (continued)

1 - Camshaft Carrier (See Note)
2 - Cylinder Block
3 - Seal Washer
4 - Hollow Bolt, M8 x 1.25
5 - Fuel Return Outer Pipe
6 - Clip Bolt
7 - Clip Bolt
8 - Hose Clamp
9 - Fuel Return Hose
10 - Nut And Washer, Injector Bracket
11 - Injector Bracket
12 - Fuel Return Inner Pipe
13 - Hollow Bolt, M8 x 1.0
14 - Seal Washer (See Note)
15 - Injector
16 - Injector Gasket
17 - Injection Pipe
18 - Injection Pipe Clamp
19 - Clamp Bolt
20 - Sleeve Nut, M12 x 1.5
21 - Injection Pump
22 - Hollow Bolt M8 x 1.25
23 - Injector O-ring

NOTE: *Some components In the previous drawing, in lieu of centerline markings, are referenced with circles that have the same letter inside. These are used to indicate points of connection between the components, such as A connects to A in the drawing, and so on.*

Precautions

⚠ WARNING

Always disconnect battery cables from battery BEFORE working on fuel system to prevent fire or explosion.

⚠ WARNING

Be careful when changing fuel system components; diesel fuel is flammable. Be sure that ignition key is OFF. DO NOT smoke or allow sources of open flame in the area while changing fuel system components. Wipe up any spilled fuel immediately. DO NOT allow fuel to come into contact with any hot surface which may cause it to ignite.

⚠ WARNING

Dispose of fuel soaked rags, paper, etc. in an appropriate air tight, fire retardant container. Fuel soaked items may spontaneously ignite and result in a fire hazard which could cause serious bodily injury or death.

⚠ WARNING

Safety glasses should be worn while working on fuel injection system. The fuel injection pump will generate pressures in excess of 13790 kPa (2000 psi). Use caution when removing injectors, injector lines, injector pipes or bleeding air from injection system.

⚠ CAUTION

Avoid severe engine damage. Fuel injectors mount in the cylinder head inside metal sleeves sealed by O-rings. Engine coolant may leak past the O-rings upon removal of injectors. Severe engine damage could result when engine coolant enters a combustion chamber. Drain engine coolant before removing the injectors.

IMPORTANT: Always wash hands and use clean tools when working on fuel injection system.

NOTICE
Read Precautions at front of this SECTION before proceeding.

Injector Test (Engine Misfiring)

1. Supply cooling water to the seawater pump.
2. Put on safety glasses.
3. With engine running at idle, carefully loosen injector pipe sleeve nut at injectors, one cylinder at a time.
   a. If idle rpm changes, injector is operating.
   b. If idle rpm does not change, injector may be faulty.

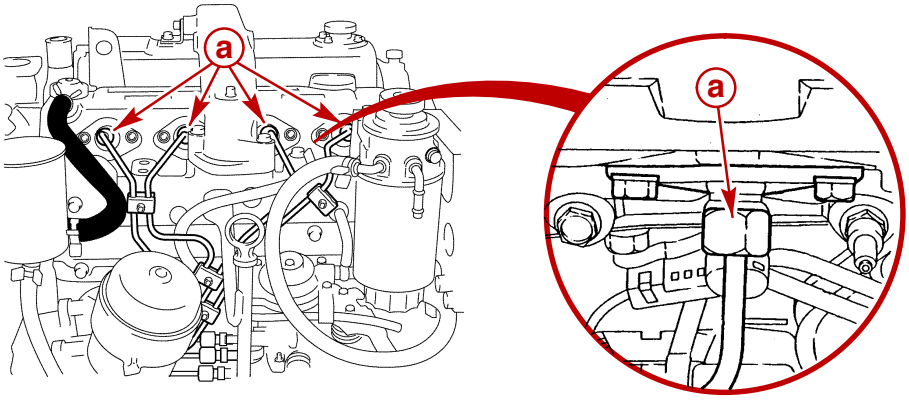

a - Sleeve Nut At Injectors

4. Check all injectors, one at a time.
5. Stop engine. Replace injector or injectors as necessary.
6. If engine continues to misfire, check for mechanical problems (faulty injection pump, burned valves).

Fuel Injectors

Removal

1. Drain coolant from cylinder block.
2. Loosen hose clamps on port side of intercooler to intake manifold air duct.
3. Remove bolts retaining intercooler to the intake manifold air duct.
4. Remove bolts retaining intake manifold air duct to the valve cover.

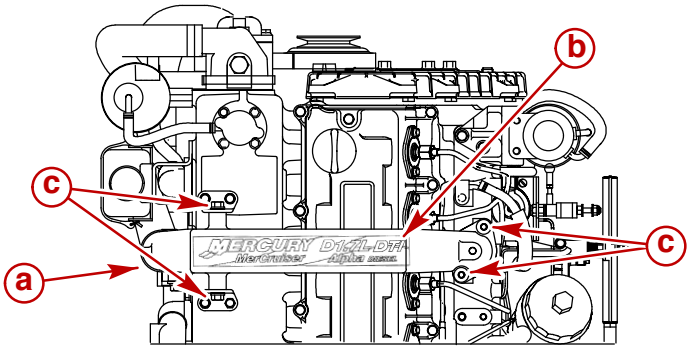

77325

a - Clamps
b - Air Duct
c - Bolts

5. Remove air duct.

⚠ CAUTION
Keep injectors and injection pump fittings clean. Do not allow dirt to enter fittings when removing or installing lines. Dirt will cause injectors or injection pump to malfunction.

6. Clean dirt from around fuel injector fittings and pipes.
7. Loosen fuel injection pipe sleeve nuts.
8. Loosen fuel injection pipe clamps.

⚠ CAUTION

Do not bend fuel injection pipes. Bending may cause metal to flake off inside pipes, causing injectors or injection pump to malfunction.

9. Remove fuel injection pipes from injection pump and injectors.
10. Disconnect hose from PCV oil separator.

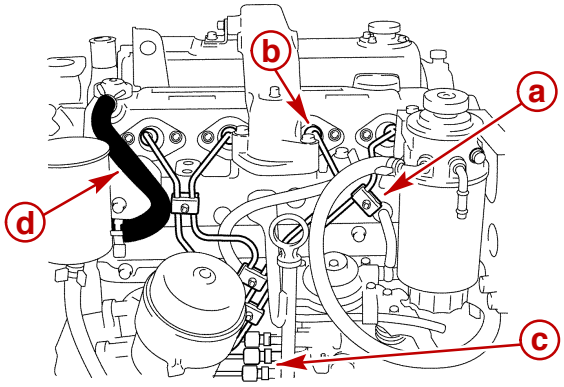

77718

a - Clamps
b - Sleeve Nut At Injector
c - Sleeve Nut At Injection Pump
d - Hose

11. Remove injector covers from valve cover.

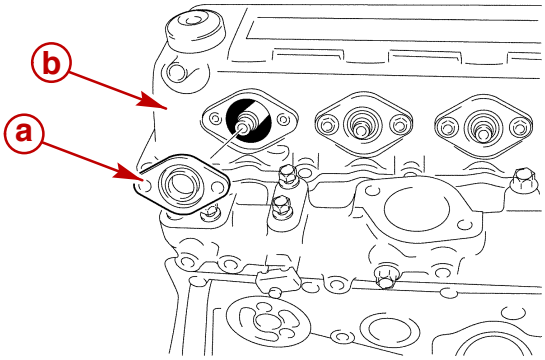

77290

a - Injector Cover
b - Valve Cover

12. Remove engine front lifting eye.

13. Remove top two bolts in upper timing cover.
14. Remove valve cover bolts and special bolt.
15. Remove valve cover.

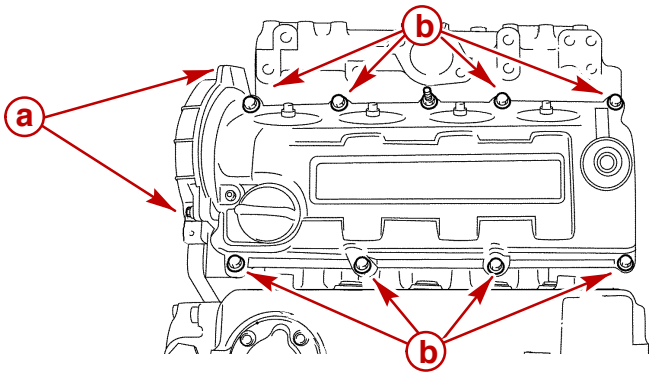

7

a - Timing Cover Bolts (2)
b - Valve Cover Bolts (9)

16. Remove fuel return pipe hollow bolts and washers. Remove fuel return pipe.

⚠ CAUTION

Avoid severe engine damage. Fuel injectors mount in the cylinder head inside metal sleeves sealed by O-rings. Removing a fuel injector could cause engine coolant to leak around the O-rings and enter a combustion chamber. Drain engine coolant before removing the injectors.

17. Ensure engine coolant has been drained from cylinder head and block.
18. Loosen and remove injector bracket nuts and washers.

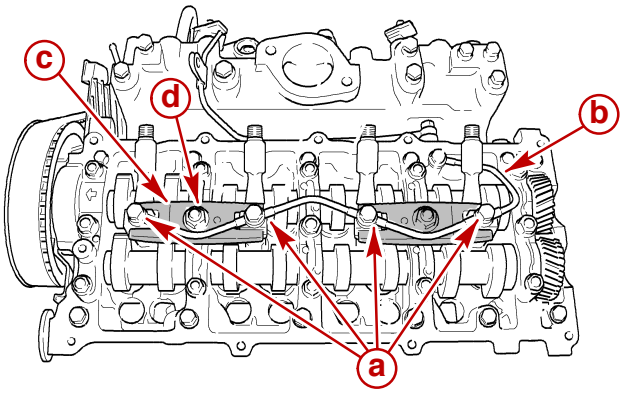

77160

a - Hollow Bolts And Sealing Washers
b - Fuel Return Pipe
c - Injector Bracket
d - Nut and Washer

19. Remove the fuel injectors with O-rings and gaskets.

Inspection

1. Remove any injector gaskets that may have stayed in head. Do not gouge or nick seat.
2. Ensure that cylinder head injector bores are clean.

IMPORTANT: Refer to SECTION 3A if injector sleeves are dislodged during injector removal.

3. Ensure injector seats have not been disturbed or were loosened during removal.

Testing

⚠ WARNING

Test fluid from the injection nozzle tester will spray out under great pressure. It can easily puncture a person's skin. Keep your hands away from the injection nozzle tester at all times.

Mercury MerCruiser recommends the EFEP60H nozzle tester from the Robert Bosch Corporation. Follow instructions with injector tester for checking nozzle opening pressure and spray pattern.

IMPORTANT: Mercury Marine does not recommend fuel injectors be disassembled for service. If an injector tester is not available, substitute a new injector for any injectors thought to be faulty.

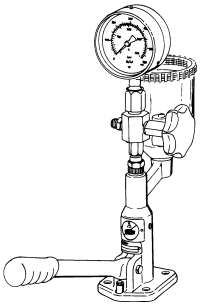

74442

EFEP60H Nozzle Tester

1. Put on safety glasses.
2. Use a nozzle tester to check the injection nozzle opening pressure and the spray condition.

Description	Specifications
Opening Pressure	335 Bar (4857.5 psi)

3. If the opening pressure is above or below the specified value, the injector must be replaced or reconditioned.
4. If the spray condition is bad, the injector must be replaced or reconditioned.

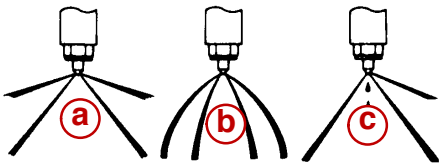

77719

a - Correct
b - Incorrect (Restrictions In Orifices)
c - Incorrect (Dripping)

Installation

⚠ CAUTION

Keep injectors and injection pump fittings clean. Do not allow dirt to enter fittings when removing or installing lines. Dirt will cause injectors or injection pump to malfunction.

IMPORTANT: Refer to SECTION 3A if injector sleeves are dislodged during injector removal.

1. Install new O-rings and new gaskets (concave side toward injector) on fuel injectors.

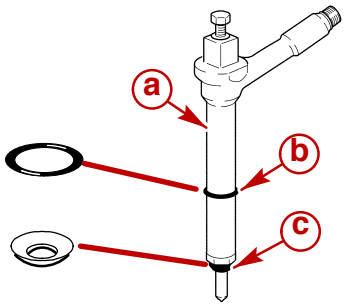

77720

a - Fuel Injector
b - O-ring
c - Gasket

2. Lubricate injector O-rings with engine oil.

Description	Where Used	Method of Use	Part Number
Engine Oil	Injector O-rings	Coat surfaces	Obtain Locally

3. Install the 4 fuel injector assemblies.

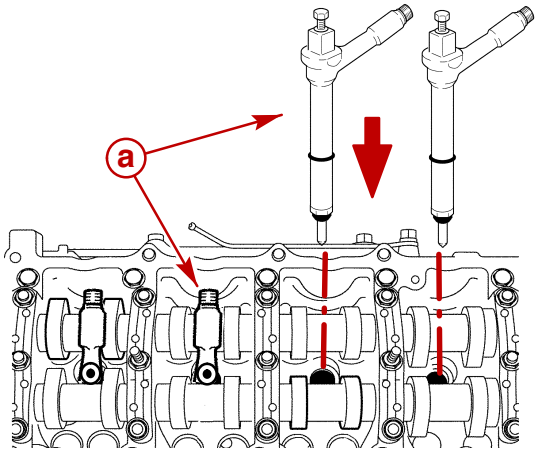

77720

77124

a - Injector Assembly

4. Apply engine oil to the injector bracket stud bolt threads, washers and nuts.
5. Torque the injector bracket nuts.

⚠ CAUTION

Do not bend fuel injector lines. Bending may cause metal to flake off inside lines, causing injectors or injection pump to malfunction.

6. Install the fuel return pipe using the hollow bolts and new seal washers. Torque the bolts.

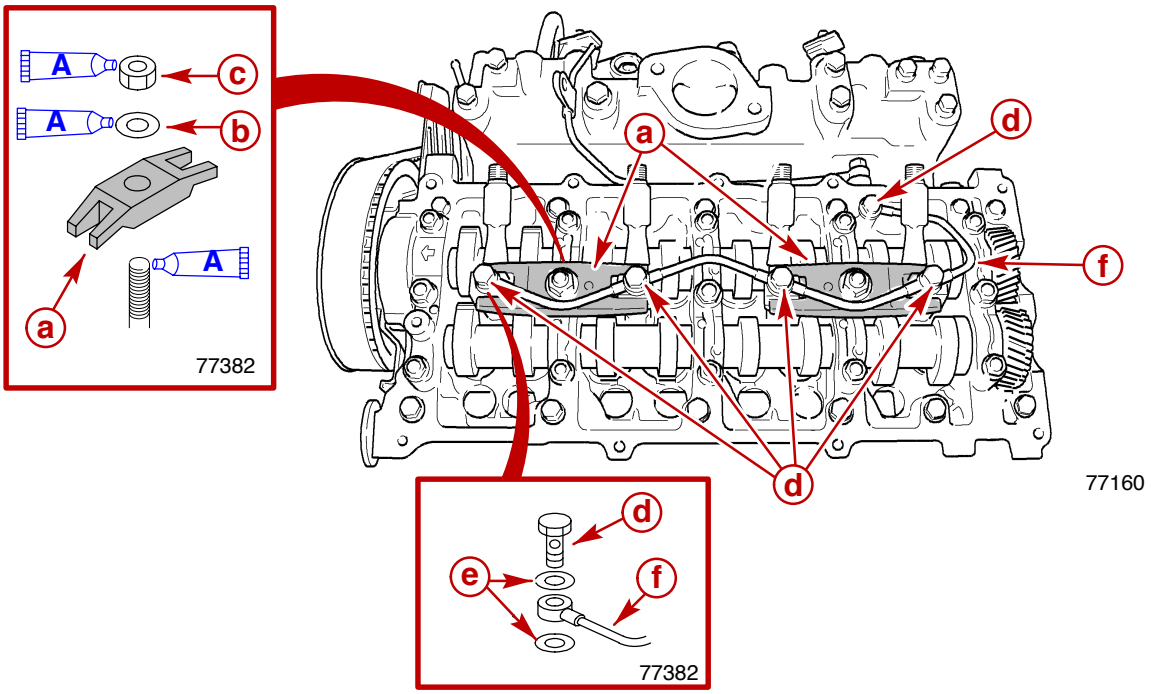

a - Injector Bracket
b - Washer
c - Nut
d - Hollow Bolt
e - New Seal Washer
f - Fuel Return Pipe

Description		Where Used	Method of Use	Part Number
A	Engine Oil	Injector O-rings	Coat surfaces	Obtain Locally

Description		Nm	lb-in.	lb-ft
Nut, Injector Bracket	M10 x 1.25	22		16
Bolt, Hollow, Fuel Return Pipe	M8 x 1.0	12.5	111	

7. Install valve cover.
8. Install upper timing cover bolts.
9. Install engine front lifting eye.
10. Install new injector covers on valve cover.
11. Install fuel injection pipes. Temporarily hand tighten sleeve nuts.
12. Secure fuel injection pipes with clamps.
13. Torque injection pipe sleeve nuts.

Description		Nm	lb-in.	lb-ft
Nut, Sleeve, Injection Pipe	M12 x 1.5	20		15

14. Install intake manifold air duct.
15. Connect hose to PCV oil separator.

Purging Air (Bleeding) From Fuel Injectors

⚠ CAUTION

To prevent damage to starter motor, do not use for more than 15 seconds at one time. Allow at least 2 minutes for starter motor to cool before reusing.

IMPORTANT: Do not allow the engine to start during this procedure. Engage STOP switch if necessary.

1. Supply cooling water to seawater pickups.
2. Put on safety glasses.
3. Slightly loosen each injection pipe sleeve nut. Crank engine with the starter motor.

NOTE: *Engine may attempt to start when fuel appears at sleeve nuts.*

4. When an air free stream of fuel appears at sleeve nut, tighten nut. Continue until all injectors are purged and sleeve nuts are tightened.
5. Torque sleeve nuts.

Description		Nm	lb-in.	lb-ft
Nut, Sleeve, Injection Pipe	M12 x 1.5	20		15

⚠ WARNING

Do not use your fingers to feel for fuel leaks at fittings. Fuel pressure is high enough to penetrate the skin.

6. Start the engine. Allow engine to reach normal operating temperature. Check for fuel leaks at injection pump and injectors by placing a piece of paper near the sleeve nuts to be checked. The paper should show leaks if present. DO NOT use your fingers to feel for leaks. Repair as necessary.
7. Test until certain no leaks are present.

NOTE: *It is helpful to use compressed air to dry area near fittings when checking for fuel leaks.*

THIS PAGE IS INTENTIONALLY BLANK

FUEL SYSTEM

Section 5C - Injection Pump

Table of Contents

5
C

THIS PAGE IS INTENTIONALLY BLANK

Identification

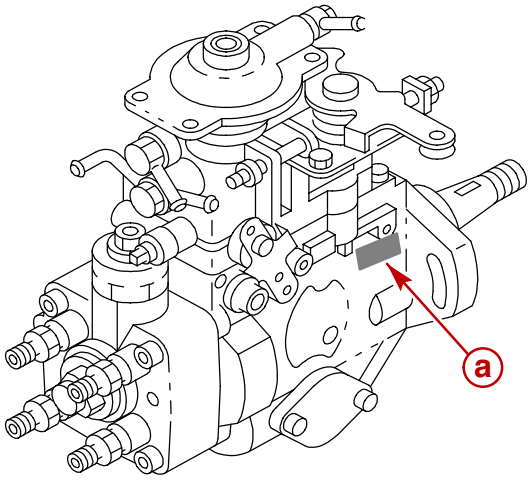

77367

a - Pump Code and Identification Number Plate

Specifications

Injection Pump

Description	Specifications
Manufacturer	Robert Bosch Corporation
Pump Code and Identification Number	Code: VE Bosch Part Number: (Not Available At Time Of Printing) Quicksilver Part Number: 882554
Type of Injection Pump	Distributor Type VE-L with Manifold-Pressure (Boost) Compensator
Ejection Pressure at Fuel Injectors	335 bar (4857.5 psi)
Governor Type	Centrifugal

Injection Pump Timing

Timing Setting	**Standard**	0.33 mm (0.013 in.)
	Limit (Test Value)	0.28 - 0.38 mm (0.011 - 0.014 in.)

Torque

Description		Nm	lb-in.	lb-ft
Bolt, Filter	M8 x 1.25	19	168	
Nut, Injector Bracket	M10 x 1.25	22		16
Bolt, Hollow, Injector	M8 x 1.0	12.5	111	
Bolt, Fuel Return Pipe Clamp	M6 x 1.0	9.8	87	
Bolt, Hollow, Fuel Return Inner Pipe	M8 x 1.25	15	133	
Bolt, Hollow, Fuel Return Outer Pipe	M8 x 1.25	15	133	
Nut, Sleeve, Injection Pipe	M12 x 1.5	20		15
Nut, Pump To Cylinder Block	M8 x 1.25	20		15
Bolt, Lower Bracket	M8 x 1.25	19	168	
Bolt, Pump To Bracket	M10 x 1.5	38		28
Bolt, Starboard Engine Mount Bracket		51		38
Bolt, Tensioner Pulley	M10 x 1.5	38		28
Bolt, Tensioner Assembly	M10 x 1.5	38		28

Special Tools

Dial Indicator	91-58222A1
Description: Measures various distances on diesel engines	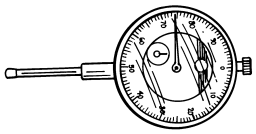 73429
Metric Dial Indicator Adaptor	**91-801333510**
Description: Used with metric dial indicator to set fuel injector pump timing	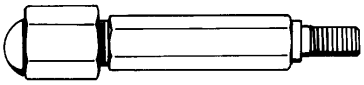 73801
SAE Dial Indicator Adaptor	**91-816997A1**
Description: Used with SAE dial indicator to set fuel injector pump timing	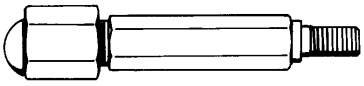 73801
Remover	**91-883844**
Description: To remove injection pump drive pulley	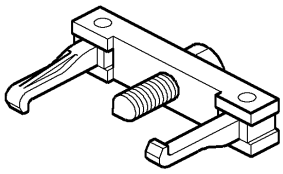

Injection Pump Repair and Service

The Robert Bosch Corporation has a network of authorized Bosch Service Dealers throughout the world to service their products.

The pump and injectors must be sent to an authorized Bosch Service Center.

When shipping an injection pump to a service center for adjustments or repairs, the fuel *return line* banjo bolt must accompany the unit. The banjo bolt incorporates a sized (calibrated) orifice for proper pressure, which is matched to the pump. The pump cannot be properly adjusted without the matched orifice.

Contact the Bosch distributor nearest you for the location of an authorized Bosch Service Center.

Exploded View

Injection Pump and Related Parts

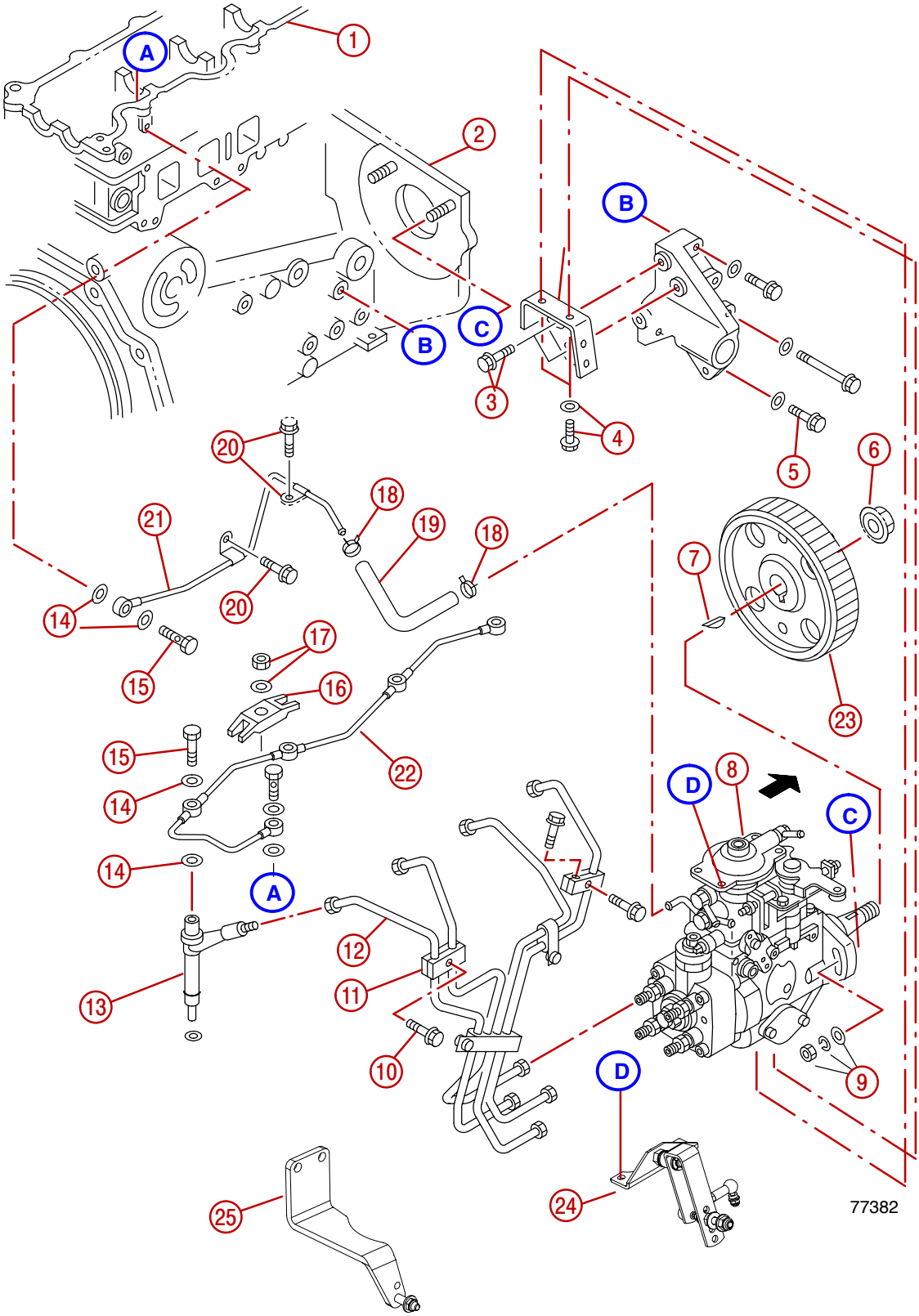

Injection Pump and Related Parts (continued)

1 - Camshaft Carrier
2 - Cylinder Block
3 - Lower Bracket Bolt And Washers
4 - Pump To Bracket Bolt And Washers
5 - Starboard Engine Mount Bracket Bolt
6 - Injection Pump Pulley Nut
7 - Woodruff Key
8 - Injection Pump
9 - Nut And Washers, Pump To Cylinder Block
10 - Injection Pipe Clamp Bolt
11 - Injection Pipe Clamp
12 - Injection Pipe
13 - Injector
14 - Seal Washer
15 - Fuel Return Outer Pipe Hollow Bolt
16 - Injector Bracket
17 - Injector Nut And Washer
18 - Hose Clamp
19 - Fuel Return Hose
20 - Clip Bolt
21 - Fuel Return Outer Pipe
22 - Fuel Return Inner Pipe
23 - Injection Pump Pulley
24 - Throttle Linkage
25 - Throttle Cable Bracket

NOTE: *Some components in the previous drawing, in lieu of centerline markings, are referenced with circles that have a letter inside. These are used to indicate points of connection between the components, such as A connects to A, and so on.*

Belt Timing

Checking

1. Remove timing cover upper part.
2. Turn the crankshaft in direction of engine rotation to cylinder number 1 TDC. The pin on the oil pump must align with the mark on the crankshaft pulley and the exhaust cam pair of lobes for 1st Cylinder must point upwards.

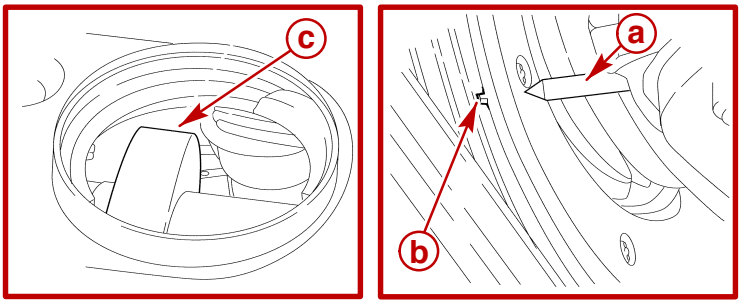

77383

a - Pointer
b - Mark
c - 1st Cylinder Exhaust Cam Lobes

3. Install TDC alignment bolts in camshaft pulley and injection pump drive pulley.

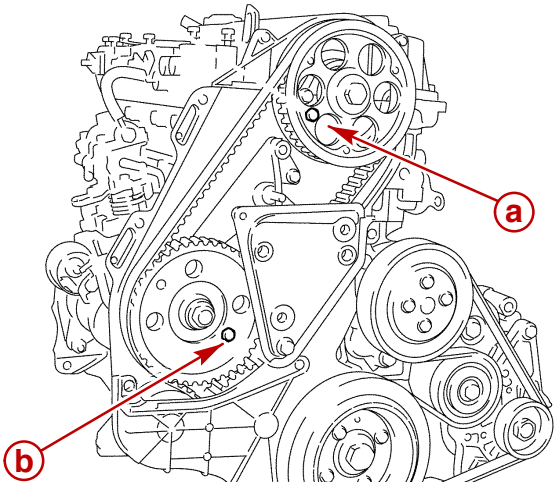

77127

a - Alignment Bolt, Camshaft Pulley (M6)
b - Alignment Bolt, Injection Pump Drive Pulley (M8)

4. If the TDC alignment bolts CANNOT be inserted, the belt timing must be adjusted.

Setting

1. Remove timing cover upper part.
2. Remove engine plate.
3. Reinstall and temporarily hand tighten engine plate bolt.

NOTE: *This bolt also serves as the lower bolt for the timing belt tensioner.*

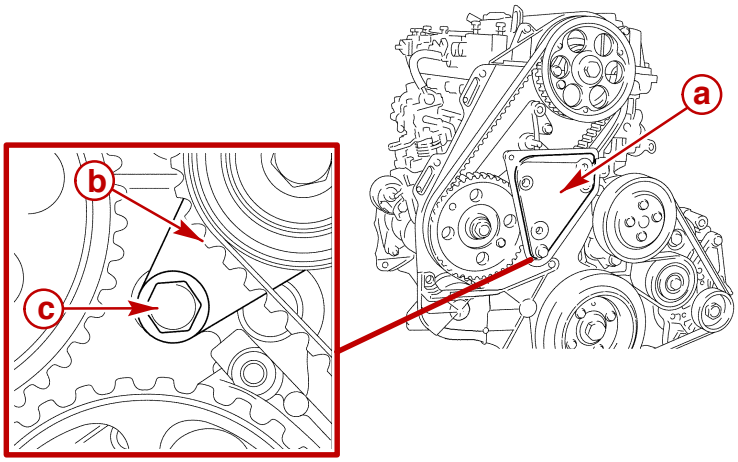

77127

a - Engine Plate
b - Timing Belt Tensioner
c - Bolt

4. Loosen timing belt tensioner pulley bolt.
5. Remove tension spring.
6. Remove timing belt from injection pump drive pulley and camshaft pulley.
7. Rotate injection pump drive pulley and camshaft pulley so that the TDC alignment bolts can be inserted.
8. Ensure that pointer on oil pump aligns with mark on crankshaft pulley.
9. First, position timing belt on injection pump drive pulley; then, on camshaft pulley.
10. Install tension spring and remove TDC alignment bolts.
11. In order to tension the timing belt, turn the crankshaft approximately 60° opposite the direction of engine rotation.

12. Torque timing belt tensioner bolts and pulley to cylinder block.

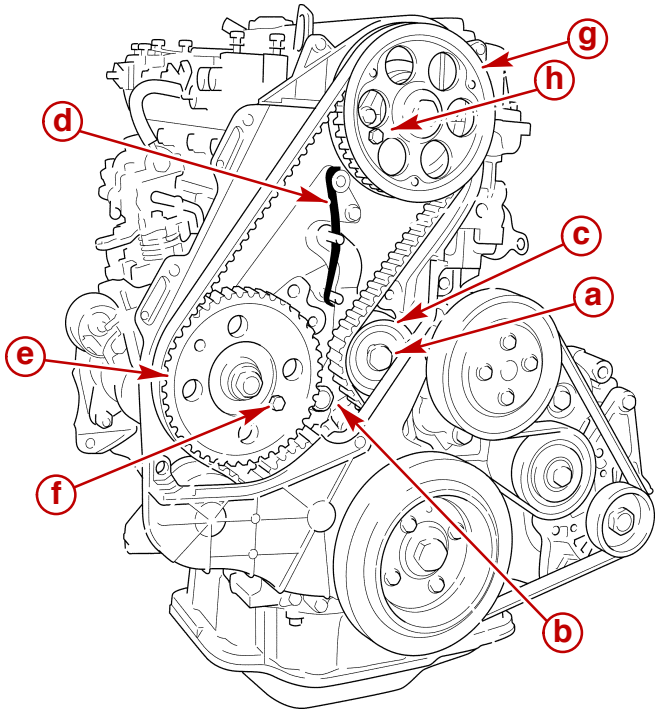

77384

a - Pulley Bolt
b - Tensioner Bolt
c - Tensioner Pulley
d - Tensioner Spring
e - Injection Pump Drive Pulley
f - Alignment Bolt (M8)
g - Camshaft Drive Pulley
h - Alignment Bolt (M6)

Description		Nm	lb-in.	lb-ft
Bolt, Tensioner Pulley	M10 x 1.5	38		28
Bolt, Tensioner	M10 x 1.5	38		28

13. Turn the crankshaft approximately 2 turns or more in direction of engine rotation to cylinder number 1 TDC position.

14. Install TDC alignment bolts in camshaft pulley and injection pump drive pulley, if possible.
15. If the TDC alignment bolts CANNOT be inserted, the operation must be repeated.

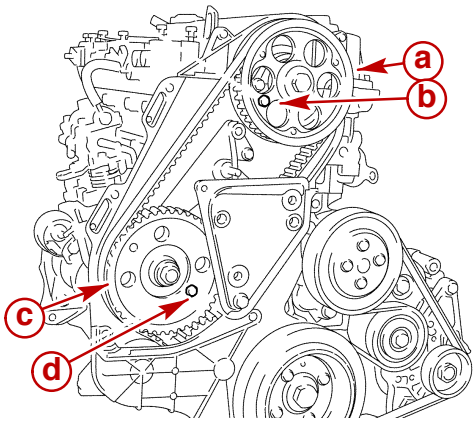

77127

a - Camshaft Pulley
b - TDC Alignment Bolt, M6
c - Injection Pump Pulley
d - TDC Alignment Bolt, M8

16. If the TDC alignment bolts CAN be inserted the injection pump belt timing is set.
17. Adjust the injection pump timing. Timing will need adjustment if :

- the injection pump is being installed due to repair or service.
- the injection pump mounting was disturbed, such as during engine disassembly or assembly.

18. Install the engine plate. Torque bolts.
19. Install upper part of timing belt cover. Torque bolts.

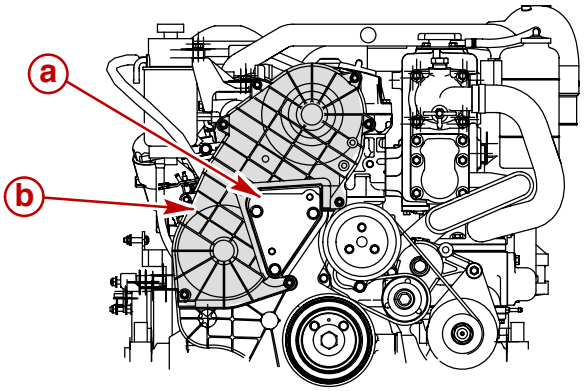

77121

a - Engine Plate
b - Timing Cover

Description		Nm	lb-in.	lb-ft
Bolt, Engine Plate / Tensioner	M10 x 1.5	38		28
Bolt, Upper Timing Belt Cover	M6 x 1.0	9.8	87	

Injection Pump Timing Adjustment

1. Remove upper part of timing cover.
2. Put on safety glasses.
3. Remove injector pipes.
4. Turn the engine in direction of engine rotation to 1st Cylinder TDC.
5. Remove central bleed screw from injection pump.

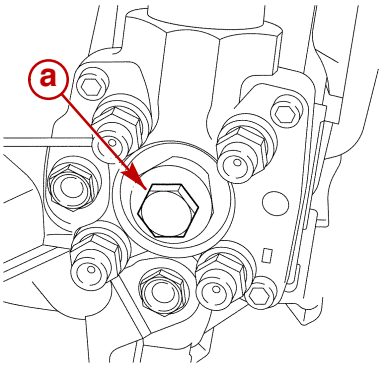

77385

a - Central Bleed Screw

6. Install dial gauge under at least 2.54 mm (0.10 in.) pre-load after probe of dial gauge rests on pump piston.

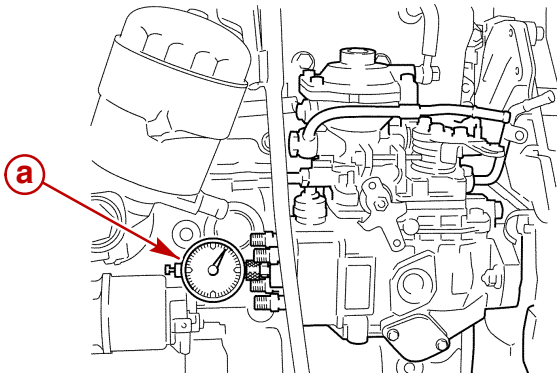

77386

a - Dial Gauge

7. Turn the crankshaft opposite the direction of engine rotation to approximately 45° before 1st cylinder TDC; the injection pump piston is at bottom dead center.

8. Set dial gauge to 0.00 mm or inches. Ensure setting by carefully turning crankshaft clockwise and counterclockwise a few degrees (approximately 5°); the dial gauge needle must not move (indicate measurement).
9. Turn crankshaft in the direction of engine rotation to 1st Cylinder TDC and read test value from dial gauge.
10. If reading is not within the limits (test value), pump timing must be adjusted.

Description		Specifications
Timing Setting	Limit (Test Value)	0.28 - 0.38 mm (0.011 - 0.014 in.)

11. Loosen injection pump to cylinder block nuts and injection pump lower bracket bolts.

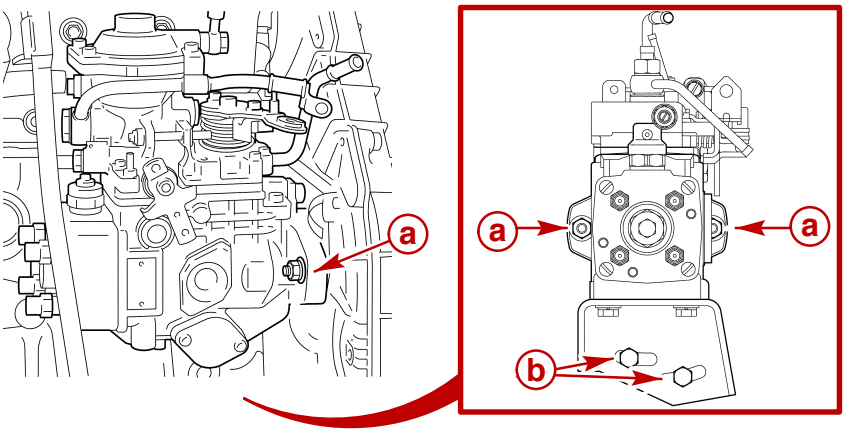

77387

a - Nut
b - Bolt

12. Turn the injection pump, until standard timing setting is achieved. Remedy as indicated by a. or b.

Description		Specifications
Timing Setting	Standard	0.33 mm (0.013)

a. Measurement greater than standard, turn injection pump towards engine.

b. Measurement less than standard, turn injection pump away from engine.

13. Torque the injection pump lower bracket bolts.
14. Torque the injection pump to cylinder block nuts.

Description		Nm	lb-in.	lb-ft
Nut, Pump To Cylinder Block	M8 x 1.25	20		15
Bolt, Pump to Bracket	M10 x 1.5	38		28

15. Turn the crankshaft approximately 2 turns in direction of engine rotation.
16. Continue to turn the engine to 1st Cylinder TDC. At this moment, the dial indicator should read the standard setting, or be within the limit indicated.

Description		Specifications
Timing Setting	Standard	0.33 mm (0.013)
	Limit	0.28 - 0.38 mm (0.011 - 0.014 in.)

17. If timing is not at the standard setting, or within the limit indicated, re-adjust pump timing until specification is met.
18. Remove dial gauge.
19. Install central bleed screw with new seal in injection pump. Torque screw.

Description	Nm	lb-in.	lb-ft
Central Bleed Screw	25		18

20. Install valve cover.
21. Install injection pipes.
22. Install upper part of timing belt cover.

Removal

1. Remove timing belt covers.

IMPORTANT: Timing belt operating direction must not be changed. It is recommended that the belt be replaced whenever removed.

2. Mark operating direction of timing belt and remove belt, if not replacing.
3. Disconnect and plug fuel supply line to injection pump.
4. Disconnect and plug fuel return line from injection pump.
5. Unclamp injection pipes.

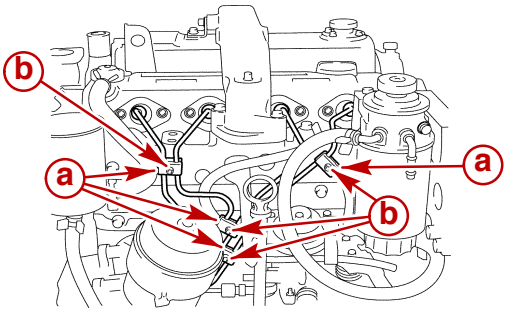

77388

a - Clamps
b - Bolts

6. Loosen injection pipe sleeve nuts.

⚠ CAUTION
Do not bend fuel injection pipes. Bending may cause metal to flake off inside pipes, causing injectors or injection pump to malfunction.

7. Remove injection pipes.
8. Disconnect injection pump boost compensator vacuum line from intake manifold.

9. With TDC alignment bolt in place to counterhold pulley, remove injection pump drive pulley retaining nut.

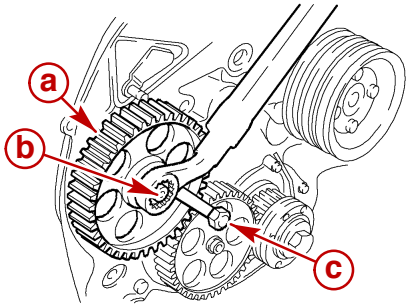

77299

a - Injection Pump Pulley
b - TDC Adjustment Bolt (M8)
c - Pulley Nut

10. Remove TDC alignment bolt. Remove injection pump drive pulley using special tool. Note woodruff key in shaft (not shown).

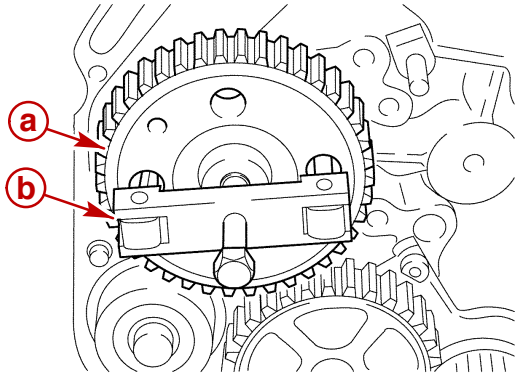

77156

a - Injection Pump Pulley
b - Special Tool

11. Remove the injection pump to cylinder block nuts and washers.
12. Remove the bracket to injection pump bolts and washers.
13. Remove the injection pump.

IMPORTANT: Put suitable protective covers (shipping plugs or similar) over the injection pump fuel ports to avoid contamination.

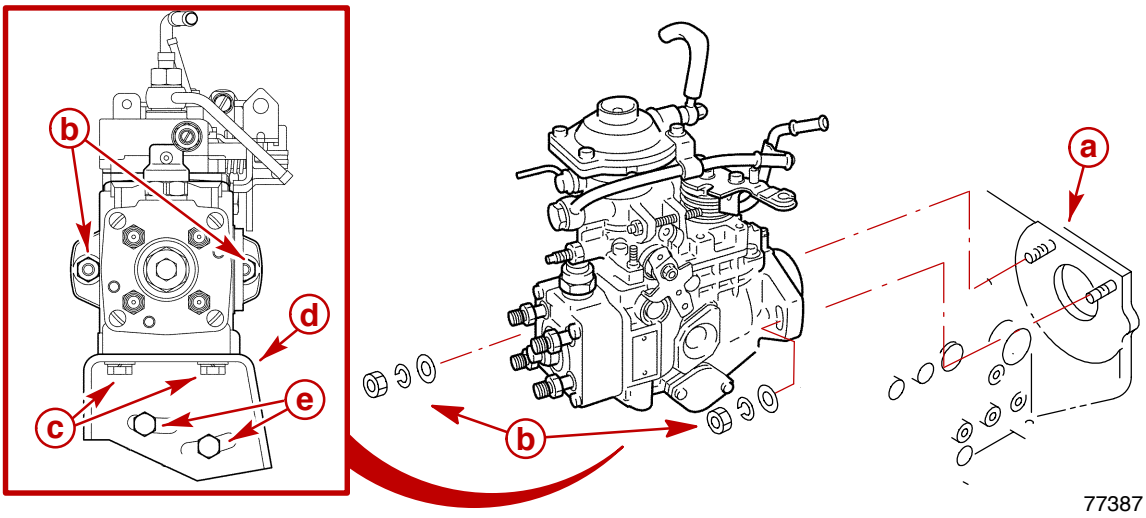

a - Cylinder Block
b - Nut And Washers
c - Bolt And Washers
d - Lower Bracket
e - Lower Bracket Bolts

Installation

1. Install injection pump key in pump slot. Apply heavy grease to hold key in slot.
2. Temporarily install gear on injection pump shaft (Do not secure gear at this time). Rotate shaft and gear to align keyway with 1st Cylinder injector port, if it is not already.
3. Remove gear.

IMPORTANT: Ensure the injection pump is flush against and properly installed on cylinder block before tightening fasteners.

NOTE: *It may become necessary to temporarily loosen bolts retaining pump bracket to front mount.*

4. Install the injection pump to the cylinder block and bracket on the front engine mount casting. Temporarily only hand tighten the nuts and bolts with respective washers.

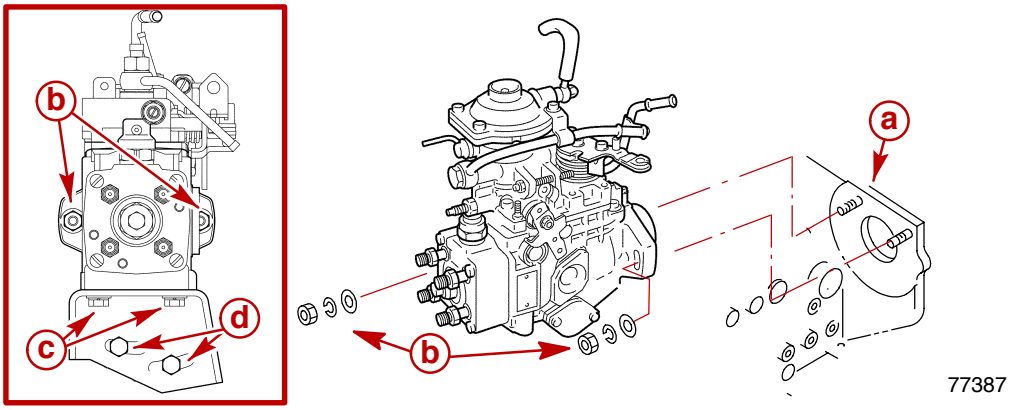

a - Cylinder Block
b - Flat Washer, Lock Washer And Nut
c - Flat Washer, Lock Washer And Bolt
d - Lower Bracket Bolts

5. Ensure injection pump key is still properly positioned.
6. Install the injection pump pulley.

IMPORTANT: Do not force pulley on shaft.

7. Temporarily hand tighten the injection pump pulley nut.

8. Lock injection pump pulley using TDC alignment bolt.
9. Torque injection pump retaining nuts and bolts.

Description		Nm	lb-in.	lb-ft
Nut, Pump To Cylinder Block	M8 x 1.25	20		15
Bolt, Pump to Bracket	M10 x 1.5	38		28

10. Torque injection pump pulley nut.

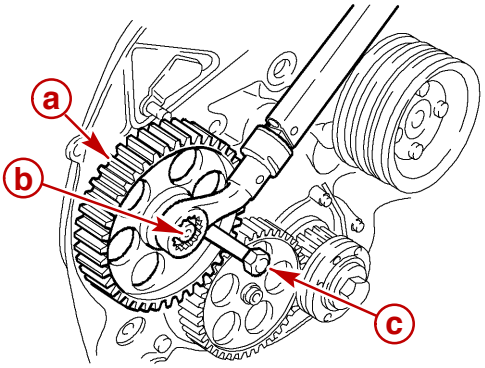

77299

a - Pulley
b - Pulley Nut
c - TDC Adjustment Bolt (M8)

Description		Nm	lb-in.	lb-ft
Nut, Injection Pump Pulley	M14 x 1.5	69		51

IMPORTANT: Timing belt operating direction must not be changed. It is recommended that the belt be replaced whenever removed.

11. Install timing belt in operating direction marked on removal, if not replacing.
12. Ensure injection pump belt timing is correct. Refer to Setting Injection Pump Belt Timing.

IMPORTANT: After pump and belt installation, you MUST adjust injection pump timing.

13. Adjust injection pump timing. Refer to Injection Timing Adjustment.
14. Install timing belt covers.

⚠ CAUTION

Do not bend fuel injector pipes. Bending may cause metal to flake off inside pipes, causing injectors or injection pump to malfunction.

15. Install fuel injection pipes. Temporarily hand tighten sleeve nuts.
16. Secure fuel injection pipes with clamps.
17. Torque injection pipe sleeve nuts.

Description		Nm	lb-in.	lb-ft
Nut, Sleeve, Injection Pipe	M12 x 1.5	20		15

18. Clamp injection pipes. Tighten bolts securely.

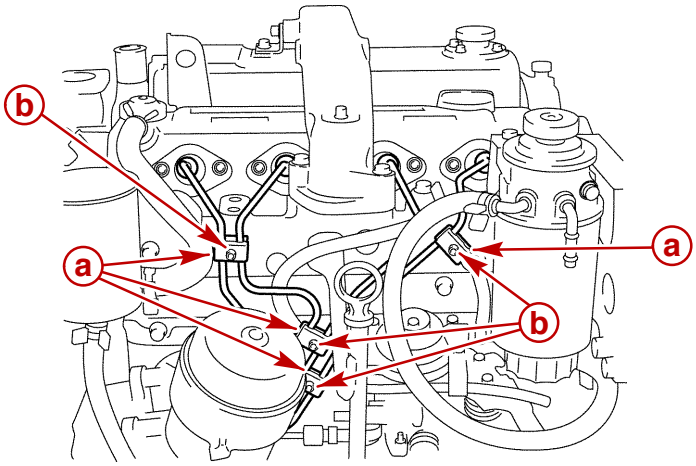

a - Clamps
b - Bolts

IMPORTANT: Ensure pressure hose from intake manifold fitting to boost compensator device on the injection pump is connected.

19. Install boost compensator pressure hose.

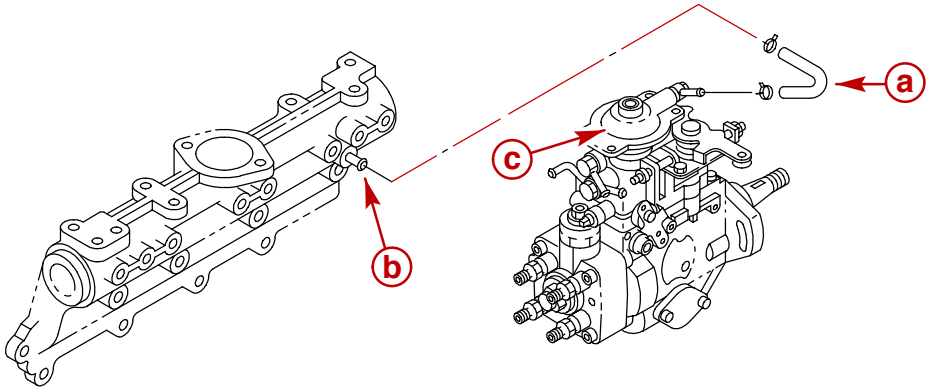

77367

a - Pressure Hose
b - Manifold Fitting
c - Boost Compensator

20. Unplug and connect fuel return line.
21. Unplug and connect fuel supply line.

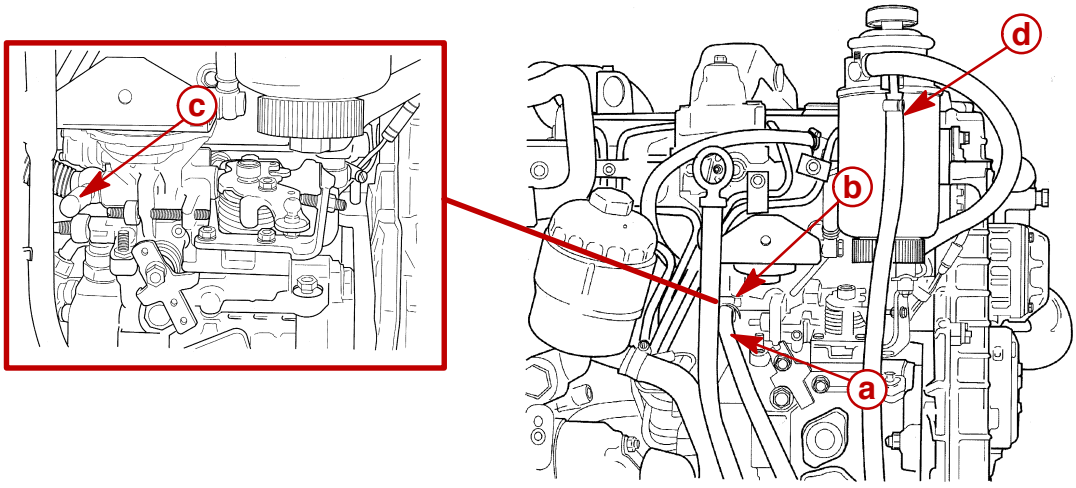

77343

a - Fuel Return Line
b - Hose Clamp
c - Return Fitting
d - Fuel Supply Line

THIS PAGE IS INTENTIONALLY BLANK

COOLING SYSTEM

Section 6A - Closed Cooling

Table of Contents

6
A

THIS PAGE IS INTENTIONALLY BLANK

Specifications

Torque Specifications

Description		Nm	lb-in.	lb-ft
Bolt, Water Pump	M8 x 1.25	24		18
Bolt, Water Pump Pulley	M6 x 1.0	9.8		7
Bolt, Front Water Pipe	M8 x 1.25	24		18
Bolt, Rear Water Pipe	M8 x 1.25	24		18
Bolt, Coolant Recovery Bottle Bracket	M8 x 1.25	19	168	
Bolt, Intake Manifold Air Duct	M8 x1.25	19	168	
Bolt, Turbocharger Air Duct	M8 x1.25	19	168	
Bolt, Intercooler Air Duct	M8 x 1.25	19	168	
Bolt, Support, Air Duct	M8 x 1.25	19	168	
Nut and Jam Nut, Turbocharger	M	44		32
Bolt, Bracket, Intercooler-To-Heat Exchanger	M	44		32
Nut and Bolt, Heat Exchanger-To-Cylinder Head	M	19	168	
Bolt, Heat Exchanger Front or Rear Cover	M8 x 1.25	19	168	
Bolt And Nut, Thermostat Housing And Cover	M8 x 1.25	19	168	
Power Steering Bracket-To-Heat Exchanger	M			

Lubricants / Sealants / Adhesives

Description	Where Used	Method of Use	Part Number
Loctite 572 or Threebond 1207C	Anode plug	Thread length	Obtain Locally
Loctite 262	Drain plugs	Thread length	

Closed Coolant

Description	L (U.S. Gal.)
Coolant (Antifreeze)	8-3/4 (9-1/4)

Water Pump

Description	Flow Rate	Pressure
Engine Water Circulating Pump	180-190 L/min. (46 - 50 U.S. gal)	125 kPa (18 psi) @ 5200 pump rpm

Thermostat

Description	Operating Temperature	Lift
Thermostat	Opening Begins at 82°C	-
	Fully Open at 90°C	9 mm (23/64 in.)

Pressure Cap

Description	Operating Pressure
Heat Exchanger Pressure Cap	101 kPa (14.7 psi)

Coolant Requirement

IMPORTANT: Alcohol or methanol base antifreeze or plain water are not recommended for use in cooling system at any time.

Description	Part Number
Quicksilver Premixed Marine Engine Coolant	92-813054A2

NOTE: *The premixed formula listed above* ***requires no mixing with water*** *or other additives. The low silicate formula prevents silicate gelling which can restrict engine cooling passages. Engine coolant provides protection down to –33° F. (–38° C).*

Anodes

Description	Length New [1]
Sacrificial Anodes	22 mm (0.87 in.)

[1] :Replace when 50% eroded.

Precautions

⚠ WARNING

Allow engine to cool before removing pressure cap, as sudden loss of pressure could cause hot coolant to boil and discharge violently. After engine has cooled, turn cap 1/4 turn to allow any pressure to escape slowly, then push down and turn cap all the way off.

⚠ CAUTION

If boat is to remain in the water, seacock must remain closed until engine is to be restarted to prevent water from flowing back into seawater cooling system. If boat is not fitted with a seacock, water inlet hose must be disconnected and plugged to prevent water from flowing into cooling system and/or boat. As a precautionary measure, attach a tag to the key switch or steering wheel with the warning that the seacock must be opened or the water inlet hose reconnected prior to starting the engine.

⚠ CAUTION

Seawater (raw water) section of cooling system MUST BE COMPLETELY drained for winter storage or immediately after cold weather use, if the possibility of freezing temperatures exist. Failure to comply may result in trapped water causing freeze and/or corrosion damage to engine.

⚠ CAUTION

DO NOT operate engine without water flowing through the seawater pickup pump, as pump impeller may be damaged and subsequent overheating damage to engine or sterndrive unit may result.

⚠ CAUTION

Avoid damage to heat exchanger and subsequent possible engine damage. Remove all water from heat exchanger sections. Failure to do so could cause corrosion or freeze damage to heat exchanger water passage tubes.

IMPORTANT: Closed cooling section must be kept filled year-round with the specified coolant.

IMPORTANT: Do not use Propylene Glycol anti-freeze in the closed cooling section of the engine.

Exploded Views

Heat Exchanger and Related Components

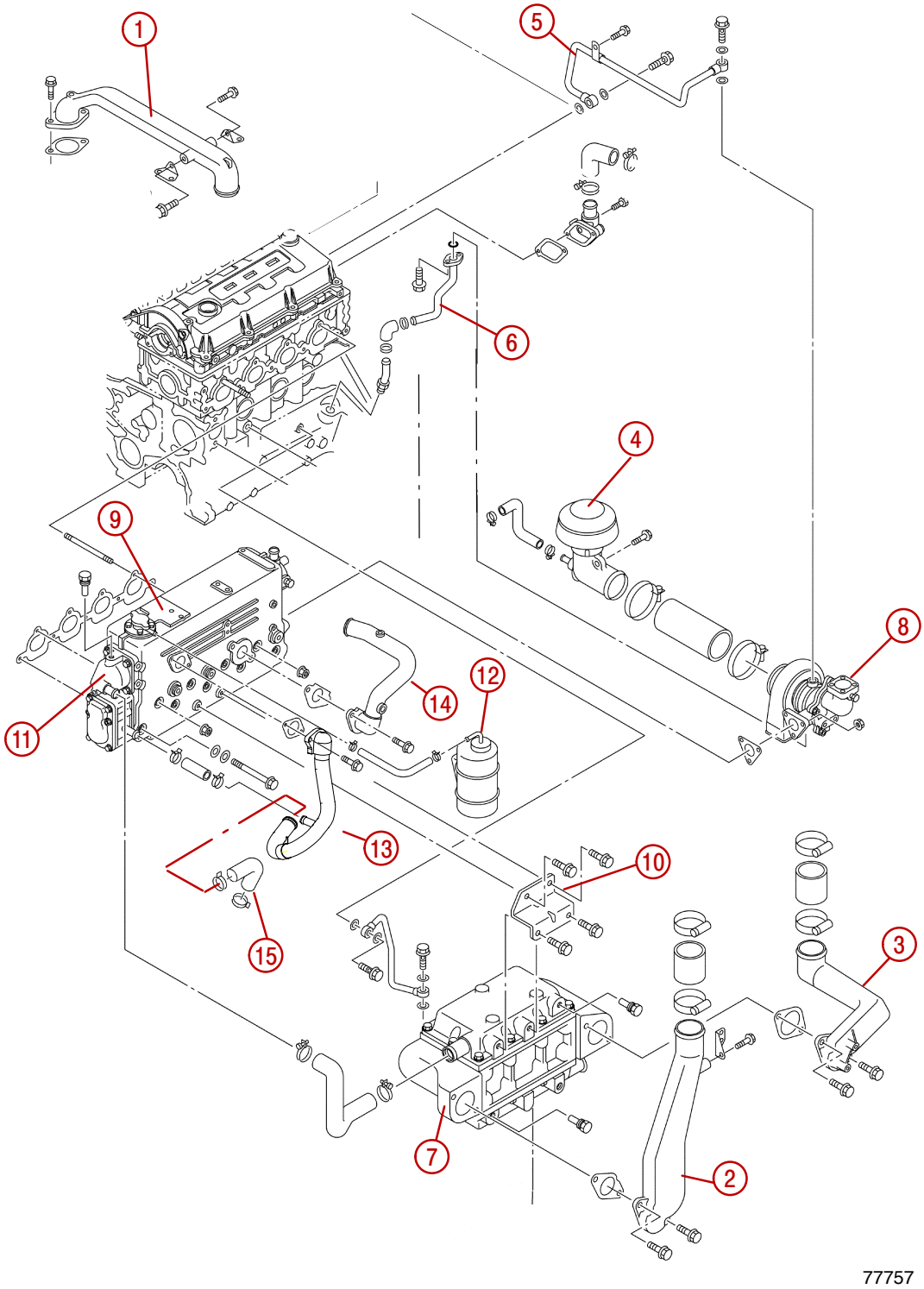

Heat Exchanger and Related Components (continued)

1 - Intake Manifold Air Duct
2 - Intercooler Air Duct
3 - Turbocharger Air Duct
4 - Air Cleaner
5 - Oil Feed Pipe
6 - Oil Drain Pipe
7 - Intercooler
8 - Turbocharger
9 - Heat Exchanger
10 - Intercooler-To-Heat Exchanger Bracket
11 - Thermostat Housing
12 - Coolant Recovery Bottle
13 - Front Water Pipe (Inlet)
14 - Rear Water Pipe (Outlet)
15 - Hose (Front Water Pipe-To Cylinder Block Water Fitting)
16 - Power Steering Cooler Hoses

Heat Exchanger

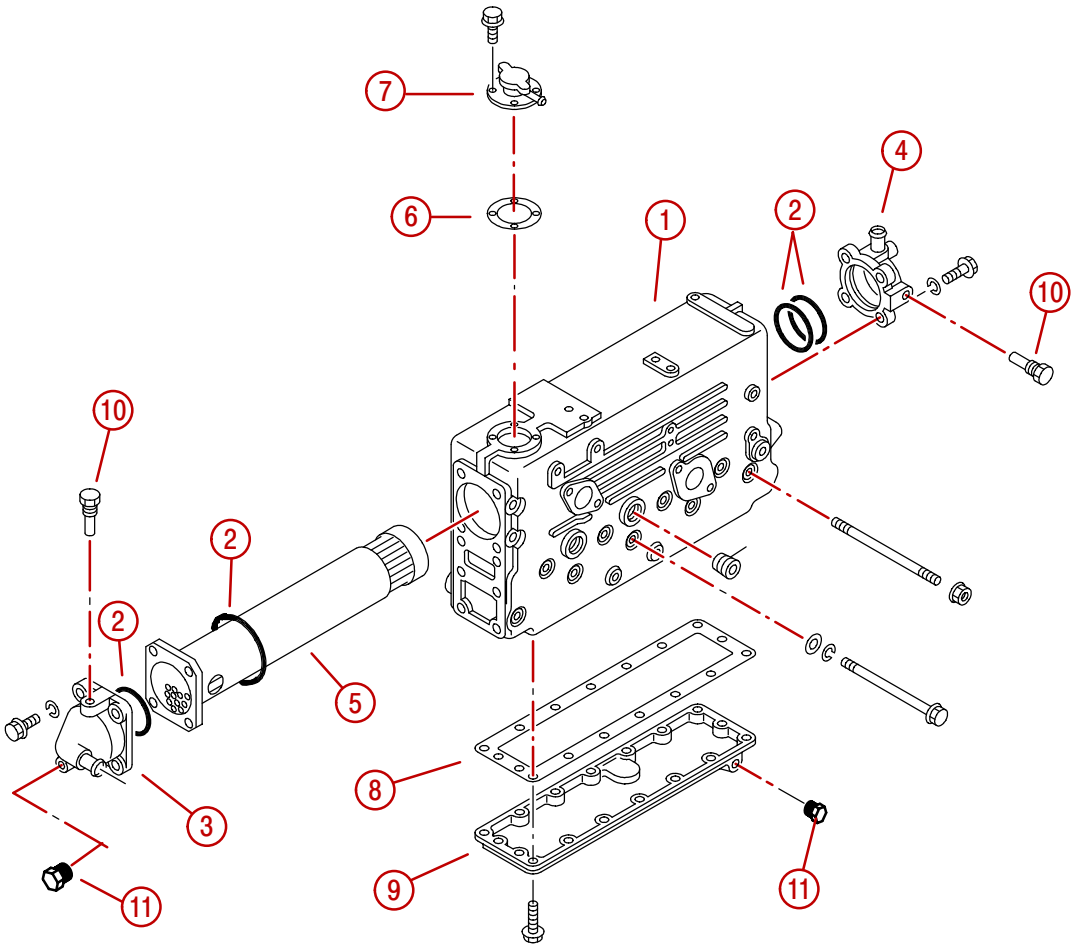

77756

1 - Heat Exchanger
2 - O-rings
3 - Front Cover
4 - Rear Cover
5 - Core
6 - Gasket
7 - Pressure Cap
8 - Gasket
9 - Cover
10 - Anode Plug
11 - Drain Plug

Water Pump

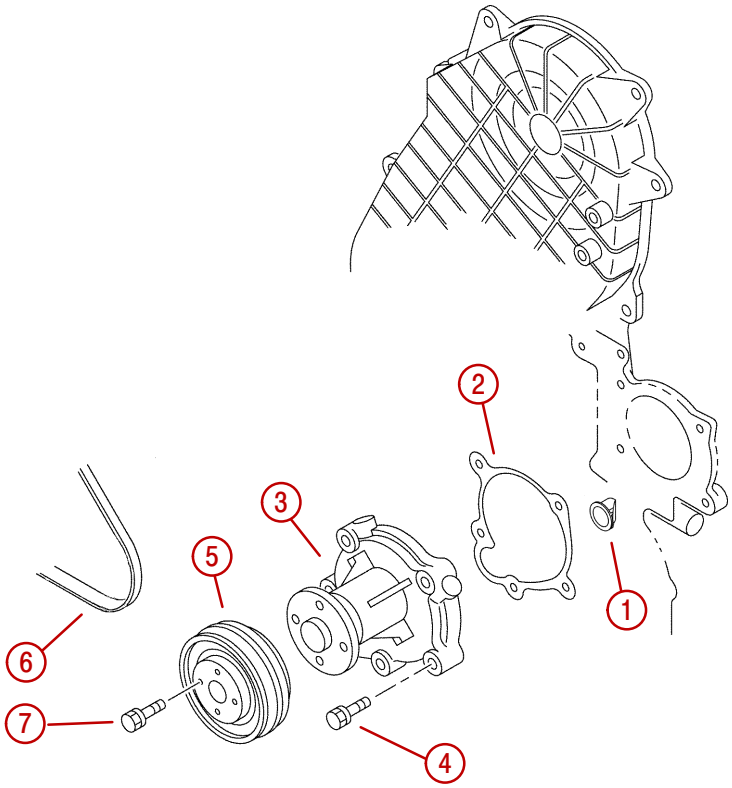

77755

1 - Guide Piece
2 - Gasket
3 - Water Pump
4 - Bolt
5 - Water Pump Pulley
6 - Serpentine Belt
7 - Bolt

Cooling System Flow Diagram

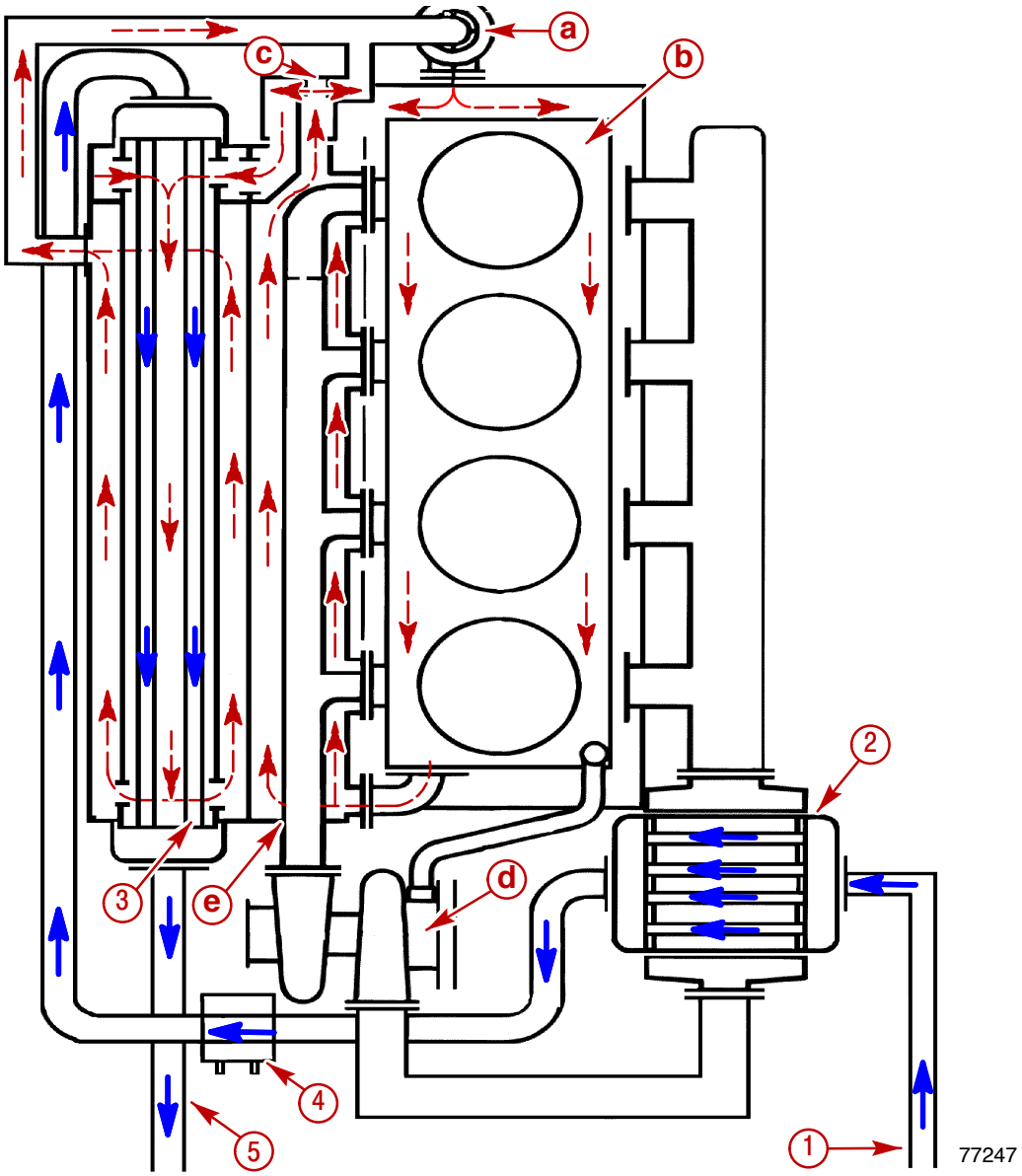

SEAWATER COOLING CIRCUIT (Seawater)

1 - Seawater Inlet
2 - Intercooler
3 - Heat Exchanger (Seawater Circuit)
4 - Fluid Cooler
5 - Seawater Outlet

CLOSED COOLING CIRCUIT (Coolant)

a - Circulating Pump - Closed Coolant
b - Engine Block
c - Turbocharger
d - Exhaust Manifold
e - Thermostat

Heat Exchanger

Removal

⚠ CAUTION

If boat is to remain in the water, seacock must remain closed until engine is to be restarted to prevent water from flowing back into seawater cooling system. If boat is not fitted with a seacock, water inlet hose must be disconnected and plugged to prevent water from flowing into cooling system and/or boat.

1. Close seacock, or disconnect and plug seawater inlet hose if boat is to remain in the water.
2. Drain seawater from seawater cooling system.
3. Drain coolant from closed cooling system. Dispose of coolant properly.
4. Disconnect water hose from intercooler (or fluid cooler)to heat exchanger front cover.
5. Leave power steering collar and hose. Lay aside until reassembly.
6. Remove coolant recovery bottle.
7. Remove gear lube monitor.
8. Remove power steering fluid reservoir and bracket, if equipped.
9. Remove intake manifold air duct.
10. Loosen upper exhaust hose clamps.

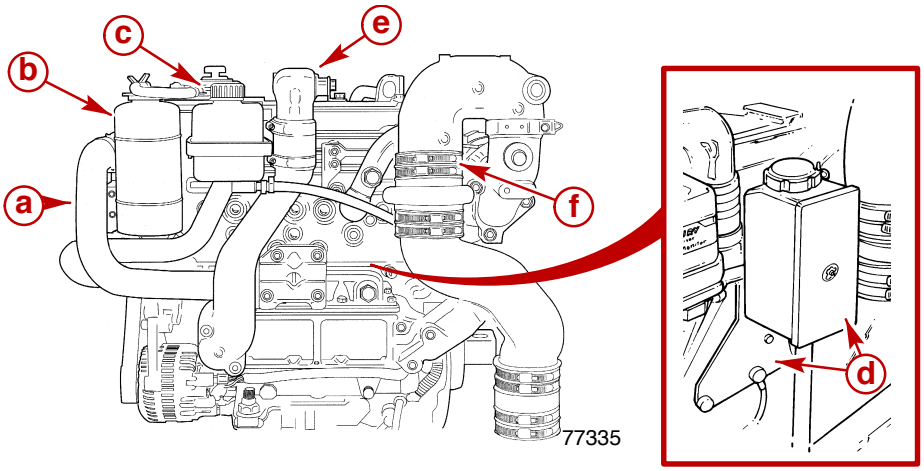

a - Water Hose
b - Coolant Recovery Bottle
c - Gear Lube Monitor
d - Power Steering Fluid Reservoir and Bracket
e - Intake Manifold Air Duct
f - Upper Exhaust Hose Clamps

11. Remove intercooler air duct.
12. Remove turbocharger air duct.

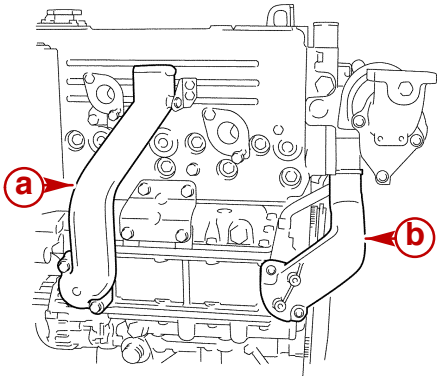

77133

a - Intercooler Air Duct
b - Turbocharger Air Duct

13. Disconnect rubber hose from the front heat exchanger water pipe to the cylinder block fitting.
14. Remove rubber hose from the rear heat exchanger water pipe to the cylinder head.
15. Remove bracket between the heat exchanger and intercooler.
16. Remove oil feed pipe to the turbocharger. Note position of sealing washers.
17. Remove oil drain pipe from the turbocharger to the cylinder block. Note O-ring.
18. Disconnect the air inlet tube from the turbocharger.
19. Remove turbocharger assembly with exhaust elbow.

IMPORTANT: DO NOT drop anything into the turbocharger openings. Plug the turbocharger openings to prevent the entry of foreign material or dust.

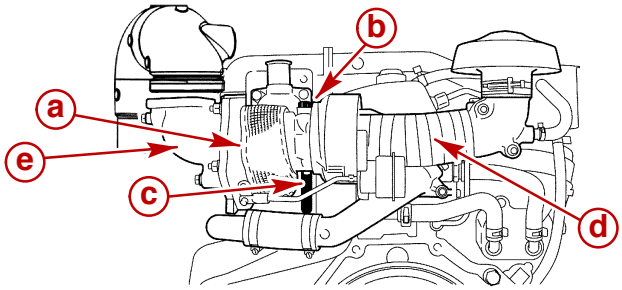

77132

a - Turbocharger
b - Oil Feed Pipe
c - Oil Drain Pipe
d - Air Inlet Tube
e - Exhaust Elbow

20. Remove heat exchanger and old gasket.

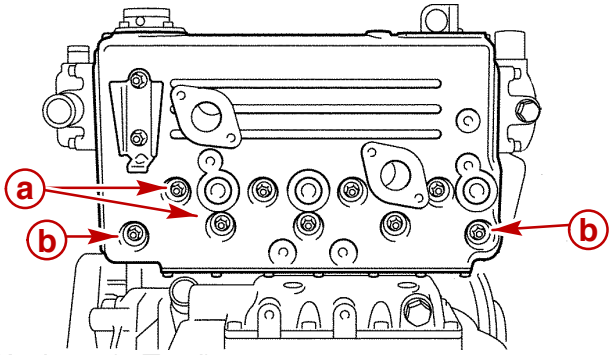

77134

a - Bolt And Washers (7 Total)
b - Stud And Nut (2 Total)

Disassembly

⚠ CAUTION

Whenever heat exchanger is disassembled or radiator insert removed from heat exchanger ALL O-ring seals must be replaced to prevent loss of engine coolant into the seawater system, which could result in severe engine damage.

1. Remove thermostat cover, thermostat and housing. Note orientation of the thermostat.

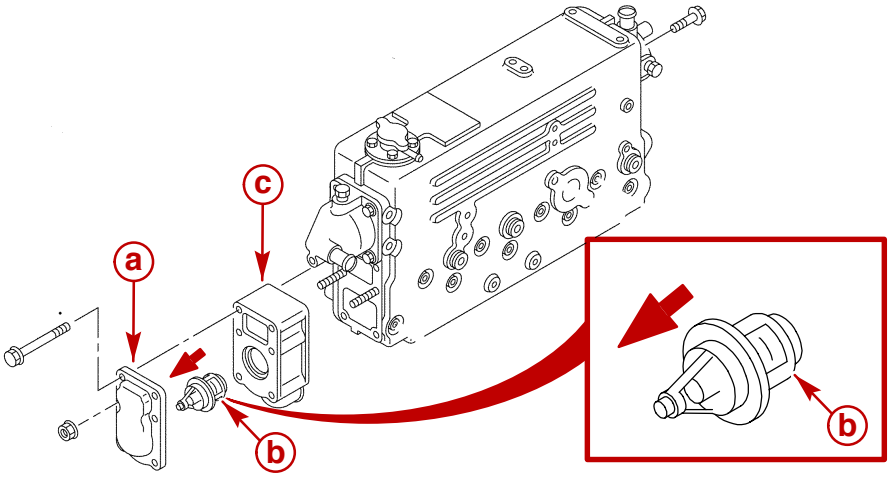

76266

a - Thermostat Cover
b - Thermostat
c - Thermostat Housing

2. Remove rear cover.
3. Remove front cover.
4. Push / pull core out of heat exchanger housing.

NOTE: *Note use and position of O-rings.*

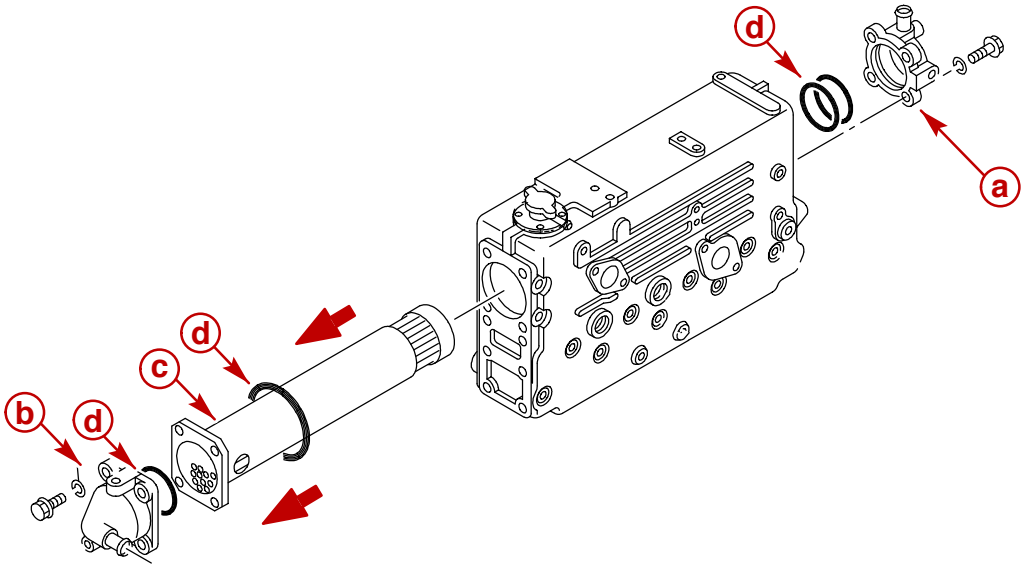

77319

a - Rear Cover
b - Front Cover
c - Core
d - O-rings

Cleaning and Inspection

1. Clean old gasket material and sealant from flanges. Do not nick or gouge the surfaces.
2. Use a long rod to clean out radiator insert tubes.
3. Inspect each part for cracks or other damage. Replace as necessary.
4. Refer to SECTION 1B and check sacrificial anodes.
5. Clean and paint exterior surfaces as required to prevent corrosion.

Reassembly

IMPORTANT: Ensure O-rings are installed without a roll or twist when in final position.

1. Place O-ring around core.
2. Insert core into front of heat exchanger housing.
3. Place O-ring in groove of front cover.
4. Install front cover. Temporarily hand tighten fasteners.

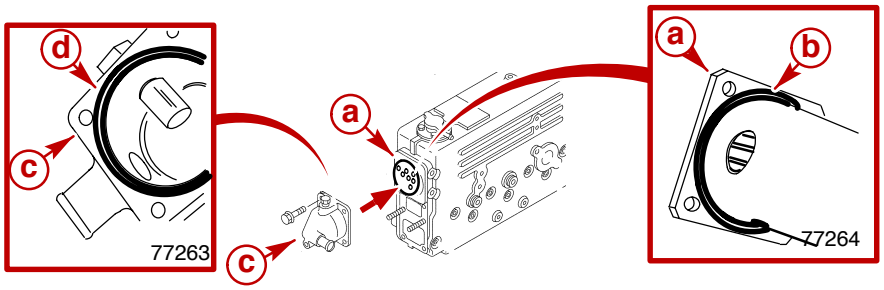

a - Core
b - O-ring
c - Front Cover
d - O-ring

5. Place O-ring in groove on rear of heat exchanger housing.
6. Place O-ring in groove of rear cover.
7. Install rear cover and rear cover bolts. Torque bolts.
8. Torque front cover bolts.

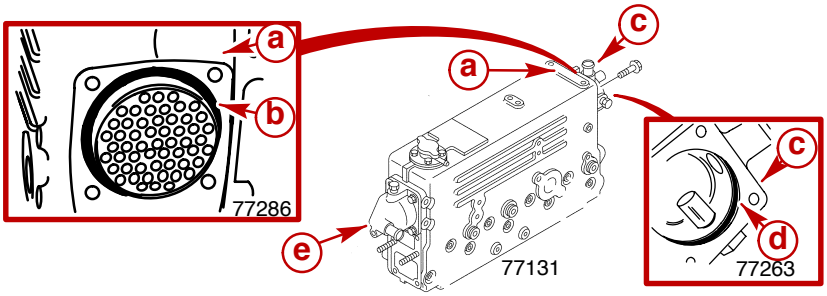

a - Heat Exchanger Housing (Rear)
b - O-ring
c - Rear Cover
d - O-ring
e - Front Cover

Description		Nm	lb-in.	lb-ft
Bolt, Heat Exchanger Front And Rear Cover	M8 x 1.25	19	168	

9. Install thermostat housing gasket.
10. Install thermostat housing.
11. Install thermostat.
12. Install thermostat cover gasket.
13. Install thermostat cover and tighten bolts (4) and nuts (2).

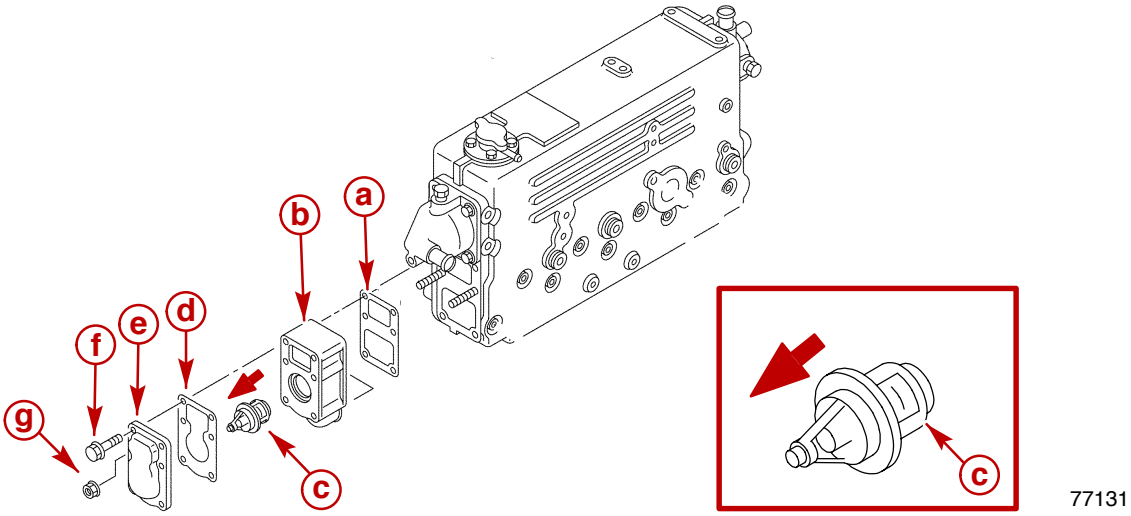

a - Thermostat Housing Gasket
b - Thermostat Housing
c - Thermostat
d - Thermostat Cover Gasket
e - Cover
f - Bolt (4)
g - Nut (2)

Description		Nm	lb-in.	lb-ft
Bolt And Nut, Thermostat Housing And Cover	M8 x 1.25	19	168	

Installation

1. Ensure that mating surfaces of cylinder head are clean and free of all old gasket material. Machined surfaces must not have nicks or gouges, which could cause water and exhaust leaks may.
2. Install cylinder head to heat exchanger gasket on cylinder head studs.
3. Install heat exchanger. Torque bolts and nuts evenly in a diagonal pattern.
4. Install intercooler-to-heat exchanger bracket. Torque bolts.

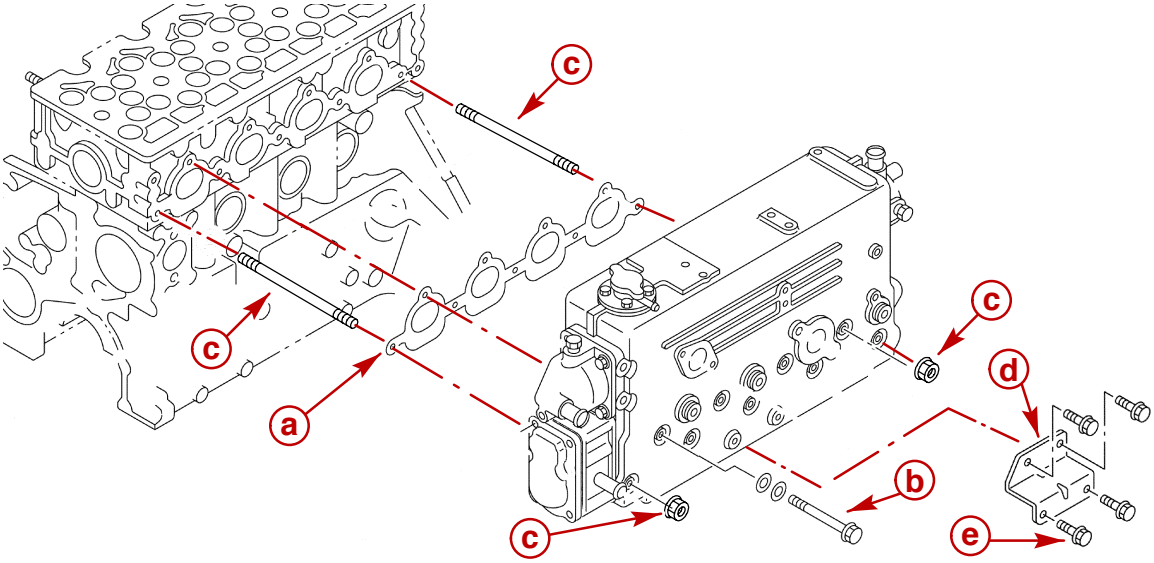

77758

a - Gasket
b - Bolt And Washers (7 Total)
c - Stud and Nut (2 Total)
d - Intercooler-To-Heat Exchanger Bracket
e - Bolt

Description		Nm	lb-in.	lb-ft
Bolt or Nut, Exhaust Manifold / Heat Exchanger	M8 x 1.25	19	168	
Bolt, Intercooler-to-Heat Exchanger Bracket	M10 x1.5	44		32

5. Install the turbocharger gasket, turbocharger assembly and exhaust elbow. Refer to SECTION 7C - Turbocharger.

6. Ensure exhaust hose is properly aligned and tighten clamps on exhaust elbow.

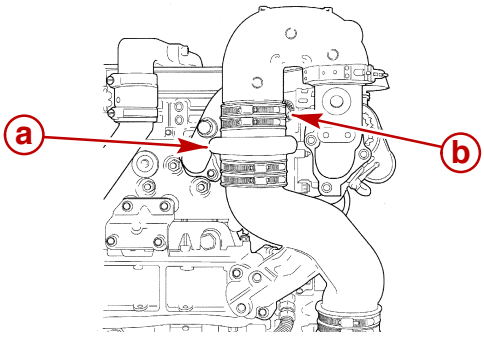

77346

a - Exhaust Hose
b - Clamps

7. Connect rubber hose between air cleaner duct and turbocharger.
8. Install turbocharger air duct to intercooler with new gasket. Attach wire harness clip under bolt. Torque bolts.
9. Install intercooler air duct to intercooler with new gasket. Install support bolt. Torque bolts.
10. Tighten all hose clamps.

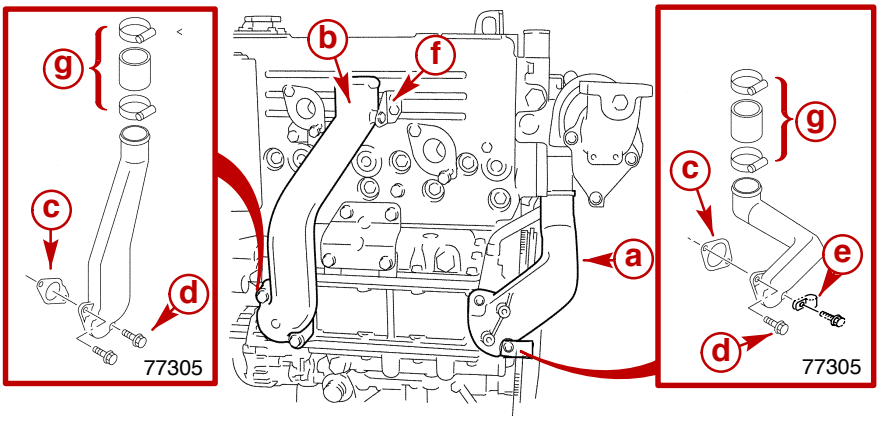

77311

a - Turbocharger Air Duct
b - Intercooler Air Duct
c - Gasket
d - Air Duct Bolt
e - Wire Harness Clip
f - Support Bolt
g - Connection Hose and Clamps

Description		Nm	lb-in.	lb-ft
Bolt, Turbocharger Air Duct	M8 x1.25	19	168	
Bolt, Intercooler Air Duct	M8 x 1.25	19	168	
Bolt, Support	M8 x 1.25	19	168	

11. Use a new gasket and install the intake manifold air duct on manifold. Torque bolts.
12. Tighten connection hose clamp.
13. Install air duct support brackets to valve cover.

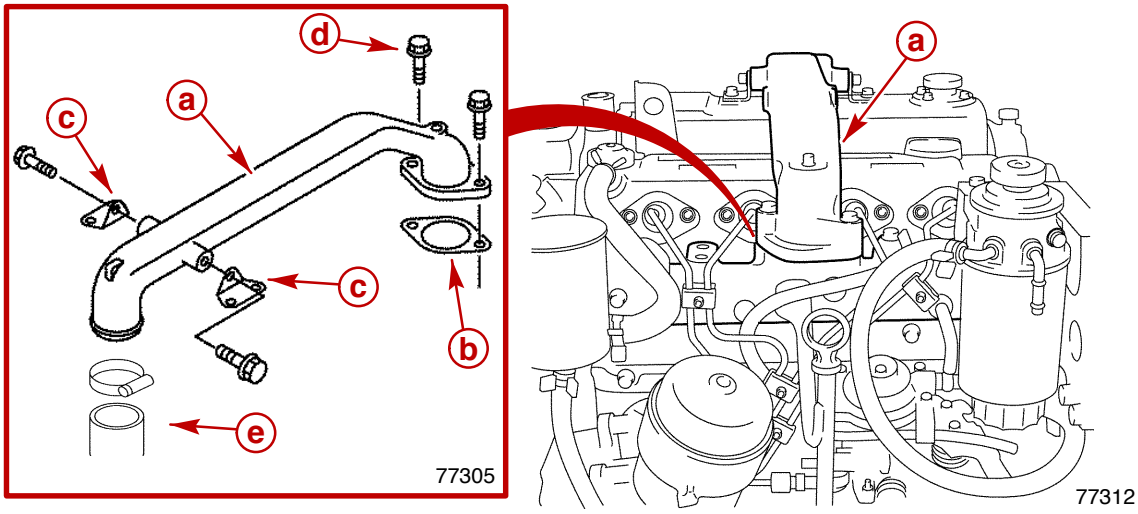

a - Intake Manifold Air Duct
b - Gasket
c - Support Bracket
d - Bolt
e - Connection Hose And Clamp

Description		Nm	lb-ft	lb-in.
Bolt, Intake Manifold Air Duct	M8 x1.25	19	168	

14. Connect rubber water by-pass hose (from T-fitting) to thermostat housing.
15. Use a new gasket and install front water pipe (inlet).
16. Connect to water bypass hose.
17. Install bolt through support clip to alternator bracket. Torque bolts.
18. Connect water hose from front water pipe to cylinder block water fitting.
19. Use a new gasket and install rear water pipe (outlet). Torque bolts.
20. Install water hose from rear water pipe to cylinder head water fitting.
21. Install drive unit gear lube monitor.
22. Install coolant recovery bottle bracket. Torque bolts. Install coolant recovery bottle and hose.
23. Install water hose from intercooler, or fluid cooler, to heat exchanger front cover.

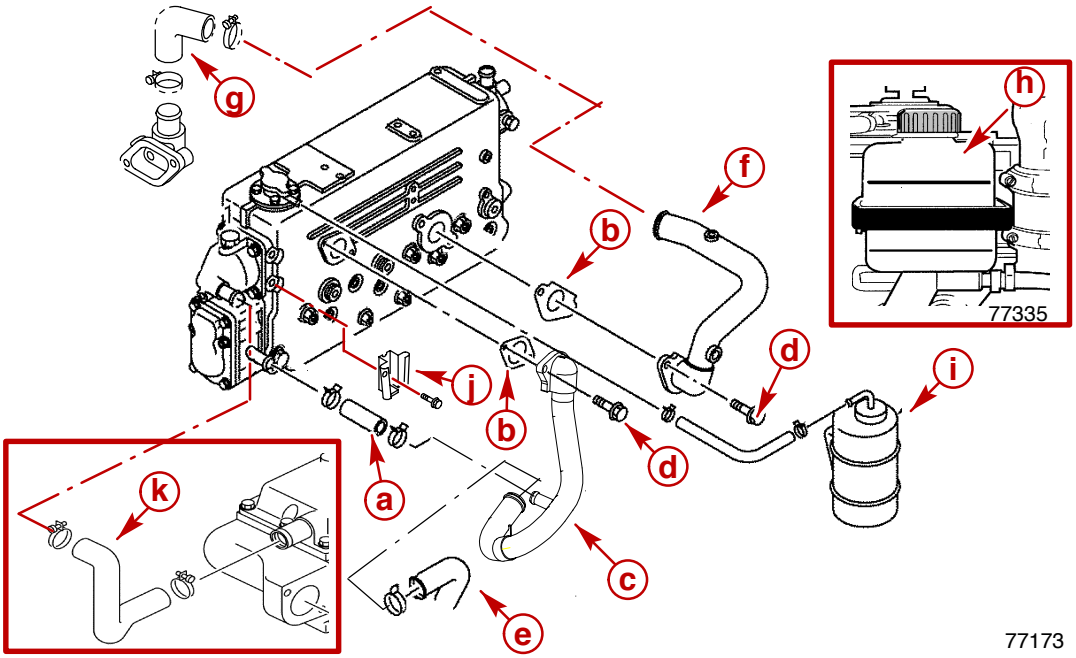

a - Water Bypass Hose (From T-fitting)
b - Gasket
c - Front Water Pipe
d - Water Pipe Bolt
e - Hose, To Cylinder Block Water Fitting
f - Rear Water Pipe
g - Water Hose, From Rear Water Pipe
h - Drive Unit Gear Lube Monitor
i - Coolant Recovery Bottle
j - Recovery Bottle Bracket
k - Water Hose, From Intercooler Or Fluid Cooler

Description		Nm	lb-in.	lb-ft
Bolt, Front Water Pipe	M8 x 1.25	24		18
Bolt, Frt. Wtr. Pipe Support	M10			
Bolt, Rear Water Pipe	M8 x 1.25	24		18
Bolt, Recovery Bottle Bracket	M8 x 1.25	19	168	

24. Install power steering reservoir and bracket, if equipped.
25. Install exhaust system.
26. Fill closed cooling system.
27. Unplug and connect seawater inlet hose or open seacock.

⚠ CAUTION

Avoid seawater pickup pump impeller damage. DO NOT operate engine without cooling water being supplied to seawater pickup pump.

28. Ensure seawater pickup pump is supplied cooling water.
29. Connect battery cables.
30. Start engine and check for leaks.

Water Circulating Pump

Removal

1. Allow engine to cool. Remove pressure cap from heat exchanger.

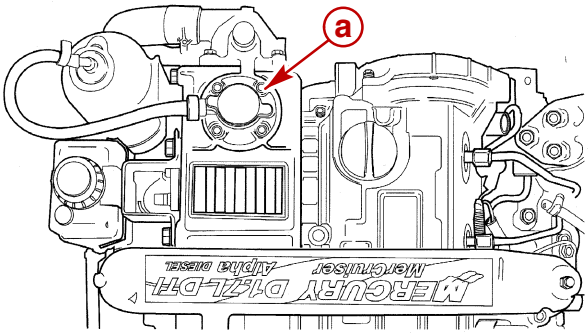

77339

a - Pressure Cap

2. Drain coolant from the engine block.

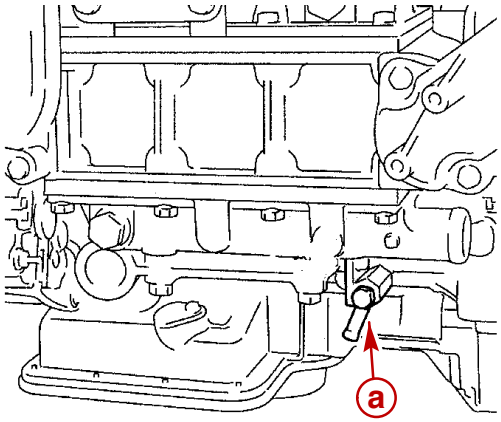

77143

a - Drain Fitting

3. After coolant has drained completely, securely close drain fitting.

4. Remove bolts and remove water pump pulley.

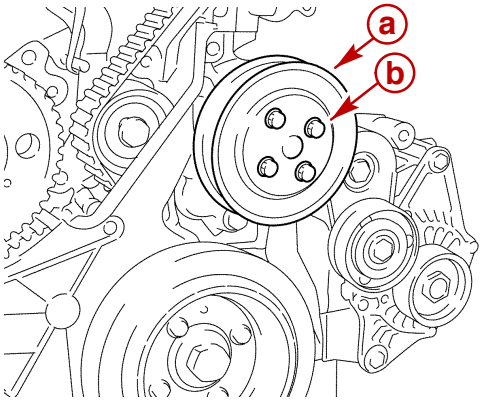

77146

a - Bolts
b - Pulley

5. Remove bolts and remove water pump.

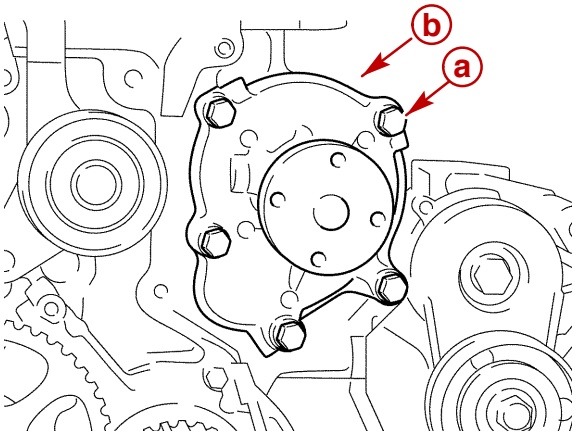

77147

a - Bolts
b - Water Pump

Cleaning and Inspection

1. Clean sealing surfaces and remove sealant residue.
2. Check bearing for excessive radial play.
3. Check bearing for abnormal noise when turning the shaft.

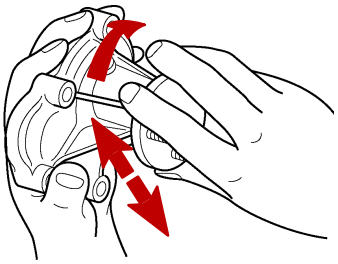

77294

4. Check pump body for cracks.
5. Check seal for signs of leaking.
6. Check pump impeller for cracks, corrosion or damage.

Installation

1. Ensure that guide piece is positioned in cylinder block water pump cavity.
2. Install new water pump gasket to cylinder block.
3. Install water pump. Torque bolts.
4. Install water pump pulley to the water pump. Torque bolts.

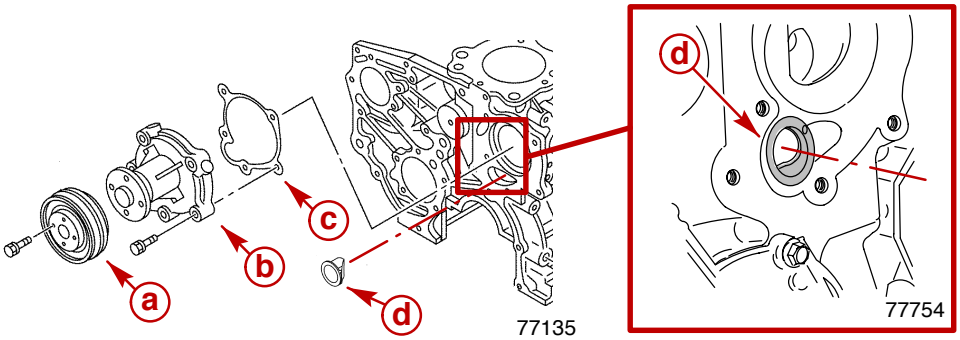

a - Gasket
b - Water Pump
c - Pulley
d - Guide Piece

Description		Nm	lb-in.	lb-ft
Bolt, Water Pump	M8 x 1.25	24		18
Bolt, Water Pump Pulley	M6 x 1.0	9.8	87	

5. Install serpentine drive belt.

Thermostat

Testing

1. Remove the thermostat.
2. Completely submerge the thermostat in water on blocks.
3. Heat the water.
4. Stir the water constantly to avoid direct heat being applied to the thermostat.
5. Refer to Specifications:
   a. Check the thermostat initial opening temperature.
   b. Check the thermostat full opening temperature.
   c. Check valve lift at fully open position.

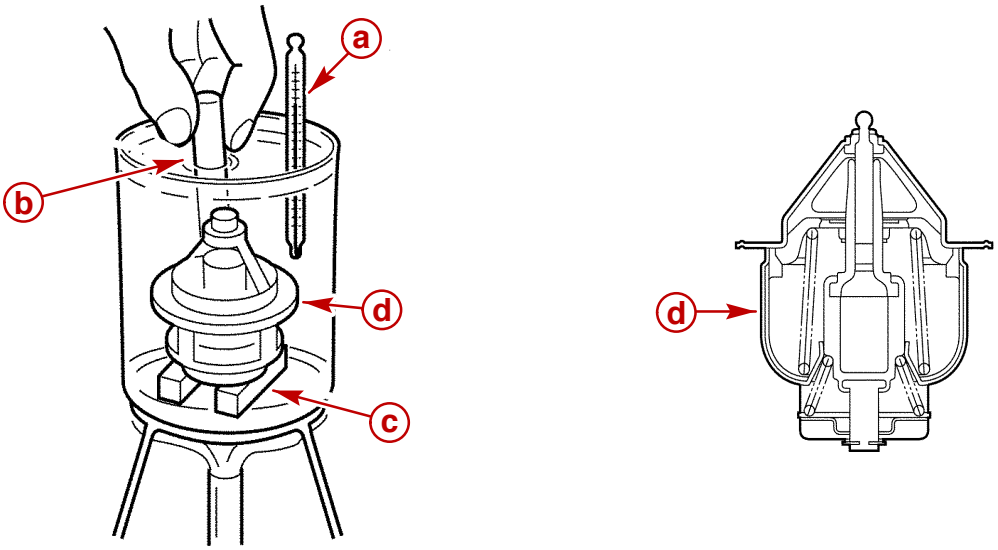

a - Thermometer
b - Agitating Rod
c - Wooden Block
d - Thermostat

6. Replace if specifications are not met or damage is discovered during inspection.

Filling Closed Cooled Section

1. Remove vent plug on water pipe near turbocharger to allow trapped air to escape during filling.

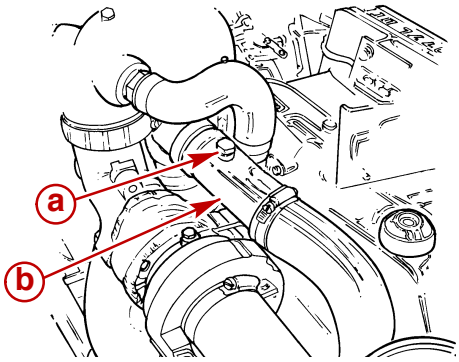

77366

a - Vent Plug
b - Water Pip

2. Slowly fill with coolant through heat exchanger fill neck.

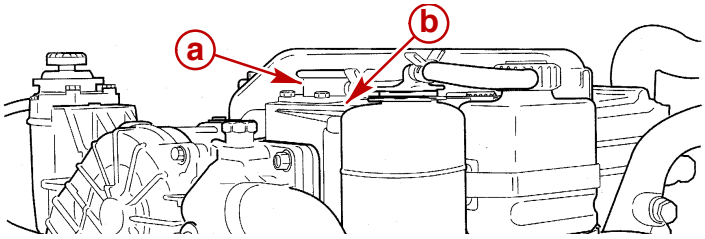

77334

a - Fill Neck
b - Heat Exchanger

3. Continue slowly filling until air free stream of coolant appears at vent plug opening.
4. Coat threads of vent plug with Perfect Seal and install.

Description	Where Used	Method of Use	Part Number
Perfect Seal	Vent Plug	Thread Length	92-64277--1

5. Continue filling until coolant level is at bottom of fill neck.

⚠ CAUTION

Avoid seawater pickup pump impeller damage and subsequent overheating damage to sterndrive unit. DO NOT operate engine without water being supplied to seawater pickup pump.

6. With pressure cap off, start engine and operate at fast idle (1500-1800 rpm). Add coolant to heat exchanger, as required, to maintain coolant level 25 mm (1 in.) below filler neck.
7. After engine has reached normal operating temperature (thermostat fully open), and coolant level remains constant, fill heat exchanger to bottom of fill neck.
8. Install pressure cap.

IMPORTANT: When installing pressure cap, be sure to tighten it until it contacts stops on filler neck.

9. Observe engine temperature gauge to make sure that engine operating temperature is normal. If gauge indicates excessive temperature, stop engine immediately and examine for cause.
10. Remove cap from coolant recovery bottle and fill to a level between the bottom (MIN) and top (Full Hot) marks with coolant. Reinstall cap.
11. With engine still operating, check hose connections, fittings and gaskets for leaks.

THIS PAGE IS INTENTIONALLY BLANK

THIS PAGE IS INTENTIONALLY BLANK

INTAKE AND EXHAUST SYSTEM

Section 7A - Intercooler

Table of Contents

NOTICE

For information and instructions on the intake manifold refer to SECTION 3A - Engine.

7
A

Specifications

Torque

Description		Nm	lb-in.	lb-ft
Bolt, Intercooler-To-Engine Mount Bracket	M10 x 1.5	44		32
Bolt, Air Duct	M8 x 1.25	19	168	
Bolt, Engine Mount Bracket	M10 x 1.5	51		38
Bolts, Intercooler Upper And Lower Cover	M	Not Available At Time Of Printing		
Bolts, Intercooler-To-Heat Exchanger Bracket	M10 x 1.5	44		32

Lubricants / Sealants / Adhesives

Description	Where Used	Method of Use	Part Number
Perfect Seal	Sacrificial anode plugs	Thread length	92-34227--1

Special Tools

Description	Part Number
Suitable Core Cleaning Brush and Rods	Obtain Locally

General Information

Some of the repairs in this section may need to be completed with engine removed from boat. Engine removal depends upon type of repair and boat design. Place engine on a repair stand for major repairs.

When engine removal is not required, make certain that battery cables are disconnected at the battery prior to performing any on-board service or repair procedures.

⚠ WARNING

Always disconnect battery cables from battery BEFORE working around electrical system components to prevent injury to yourself or damage to electrical system should a wire be accidentally shorted.

Refer to SECTION 1B - for scheduled maintenance on draining condensation from the intercooler.

Intercooler Draining

1. Remove small condensate drain plug from intercooler.
2. Drain liquid that may have condensed in the intercooler during operation.
3. After intercooler has drained, apply sealer to threads of plug and install.
4. Tighten plug securely.

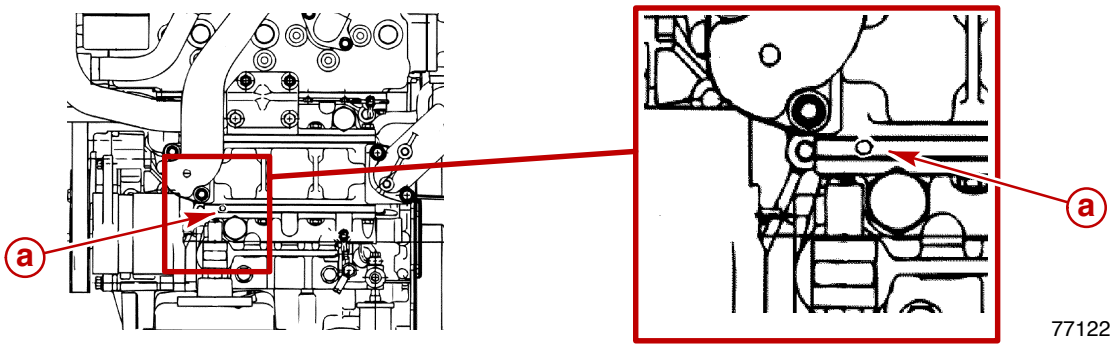

a - Condensate Drain Plug

Description	Where Used	Method of Use	Part Number
Perfect Seal	Drain plug	Thread length	92-64277--1

Exploded View - Intercooler and Related Parts

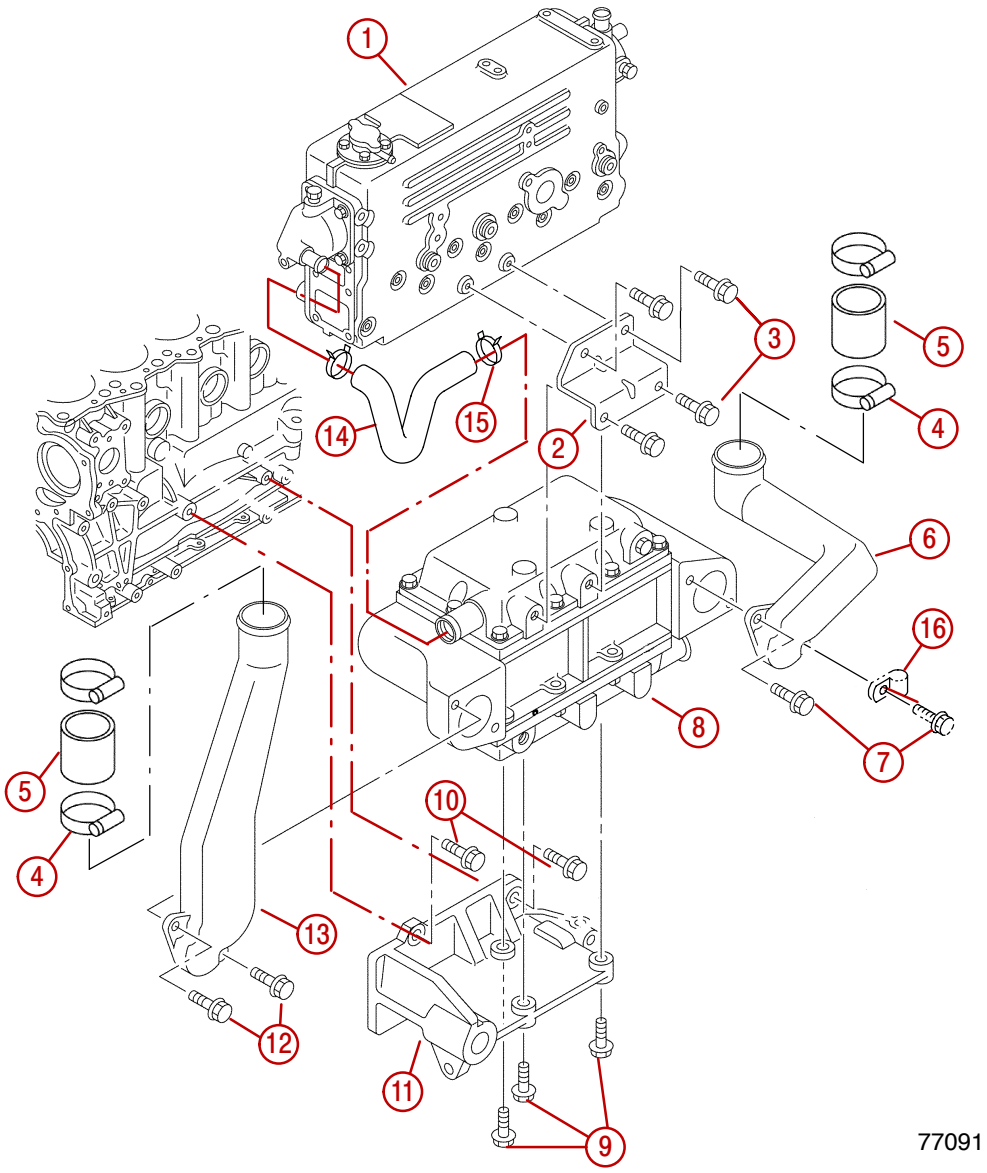

1 - Heat Exchanger
2 - Bracket, Intercooler-To-Heat Exchanger
3 - Bolt
4 - Clamp
5 - Connection Hose
6 - Air Duct, Turbocharger-To-Intercooler
7 - Bolt, Air Duct
8 - Intercooler
9 - Bolt, Intercooler-To-Bracket
10 - Bolt, Engine Mount Bracket-To-Cylinder Block
11 - Engine Mount Bracket
12 - Bolt, Air Duct
13 - Air Duct
14 - Water Hose
15 - Clamp
16 - Clip, Wire Harness

Removal

⚠ CAUTION

If boat is to remain in the water, seacock, if equipped, must remain closed until engine is to be restarted to prevent water from flowing back into seawater cooling system. If boat is not fitted with a seacock, water inlet hose must be disconnected and plugged to prevent water from flowing into cooling system and/or boat. As a precautionary measure, attach a tag to the ignition switch or steering wheel with the warning that the seacock must be opened or the water inlet hose reconnected prior to starting the engine.

1. Close seacock, if equipped, or disconnect and plug seawater inlet hose, if boat is to remain in the water.
2. Refer to SECTION 1B and drain seawater from seawater cooling system.
3. Disconnect the seawater inlet and outlet hoses from the intercooler.
4. Remove power steering fluid reservoir, if equipped.
5. Remove air duct to the intake manifold.
6. Remove air duct from the turbocharger.
7. Remove bracket from intercooler to heat exchanger.

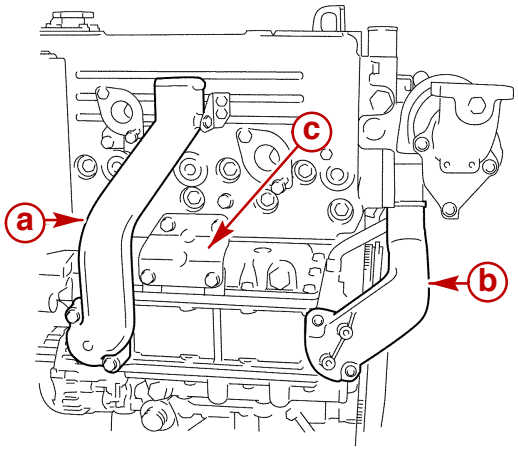

77133

b - Air Duct To Intake Manifold
c - Air Duct From Turbocharger
d - Bracket From Intercooler To Heat Exchanger

8. Disconnect the water hose from the intercooler outlet to the heat exchanger front cover.
9. Remove the three M10 bolts fastening the intercooler to engine mount bracket.
10. Remove the intercooler.

Cleaning and Inspection

⚠ CAUTION

Whenever intercooler is disassembled or radiator insert removed from intercooler ALL gaskets and seals must be replaced to prevent seawater from leaking into intake air duct and manifold which could result in severe engine damage.

1. Unless the intercooler is suspect of extreme contamination it may be possible to flush out deposits. Flushing should be done in direction opposite normal water flow to allow water to force out deposits or contamination.
2. Clean old gasket material and sealant from flanges. Do not nick or gouge the surfaces, which would cause intake or water leaks.
3. Depending on service requirement and/or to allow for a complete cleaning and inspection, remove top and bottom covers from intercooler housing. Clean old gasket material and sealant from flanges. Do not nick or gouge the surfaces, which would cause water leaks.

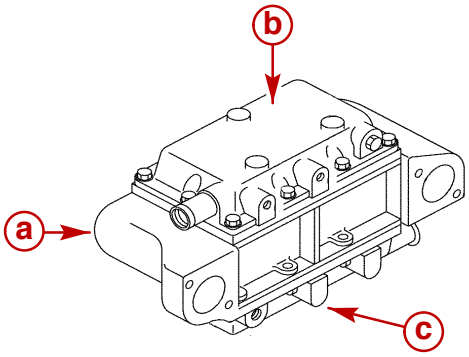

77173

a - Intercooler Housing
b - Top Cover
c - Bottom Cover

4. Use a suitable diameter and length cleaning rod to clean out core insert tubes, or take to a radiator shop for cleaning.
5. Inspect each part for cracks or other damage which would render it unserviceable.
6. Using compressed air, immerse in water and pressure test parts or system, if required. Use plates or fabrications to block and check for leaks.
7. Refer to SECTION 1B and check anodes.
8. Clean and paint exterior surfaces to prevent corrosion.

Reassembly

If the intercooler was disassembled during cleaning and inspection, reassemble as follows.

1. Ensure sealing surfaces are clean.
2. Coat upper and lower cover bolts with anti-seize compound.
3. Apply a 4 mm (5/32 in.) bead the sealant to intercooler housing sealing flanges.
4. Install the top and bottom cover.
5. In a crisscross pattern from the center bolts out, torque bolts as specified.

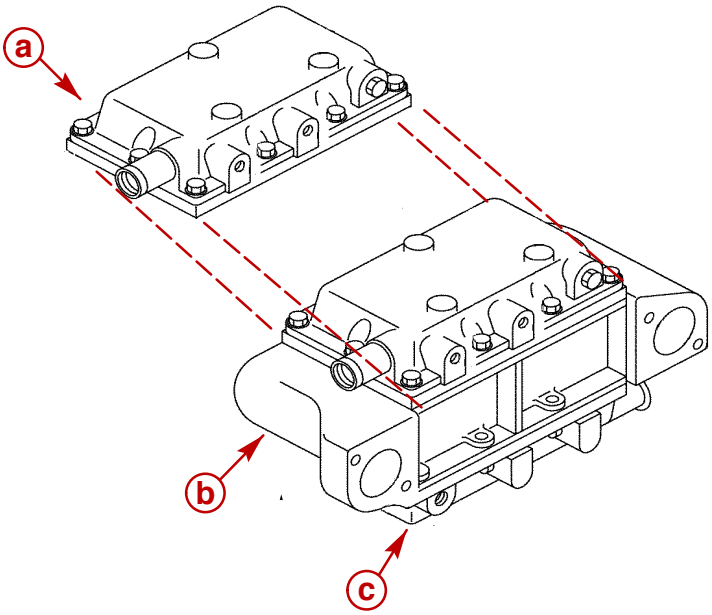

77173

a - Intercooler Housing
b - Top Cover
c - Bottom Cover

Description	Nm	lb-in.	lb-ft
Bolts, Intercooler Upper and Lower Cover	Not Available At Time Of Printing		

6. Apply Loctite Pipe Sealant with Teflon to threads of sacrificial anode plugs and install. Tighten securely.

Installation

1. Install the intercooler on port engine mount bracket. Torque bolts.

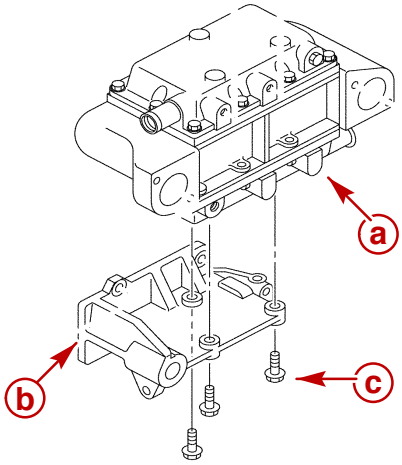

77130

a - Intercooler
b - Bracket
c - Bolt

Description		Nm	lb-in.	lb-ft
Bolt, Intercooler	M10 x 1.5	44		32

2. Install intercooler to heat exchanger bracket and power steering reservoir bracket, if equipped. Torque bolts.

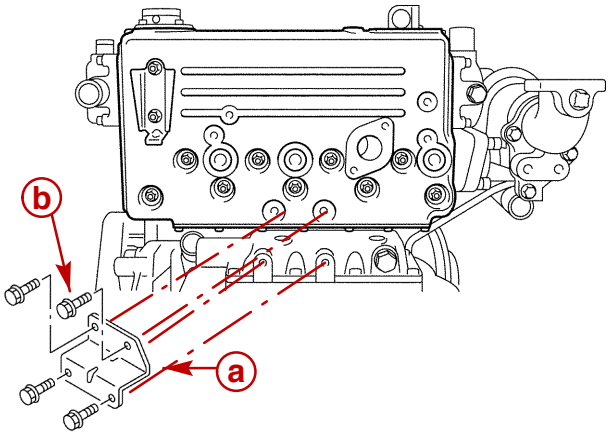

77134

a - Bracket
b - Bolt And Washer

Description		Nm	lb-in.	lb-ft
Bolt, Bracket, Power Steering Reservoir Bracket.	M10 x 1.5	19	168	

3. Install turbocharger air duct with new gasket. Torque bolts.
4. Install intercooler air duct with new gasket. Torque bolts.
5. Tighten clamps on connection hoses.

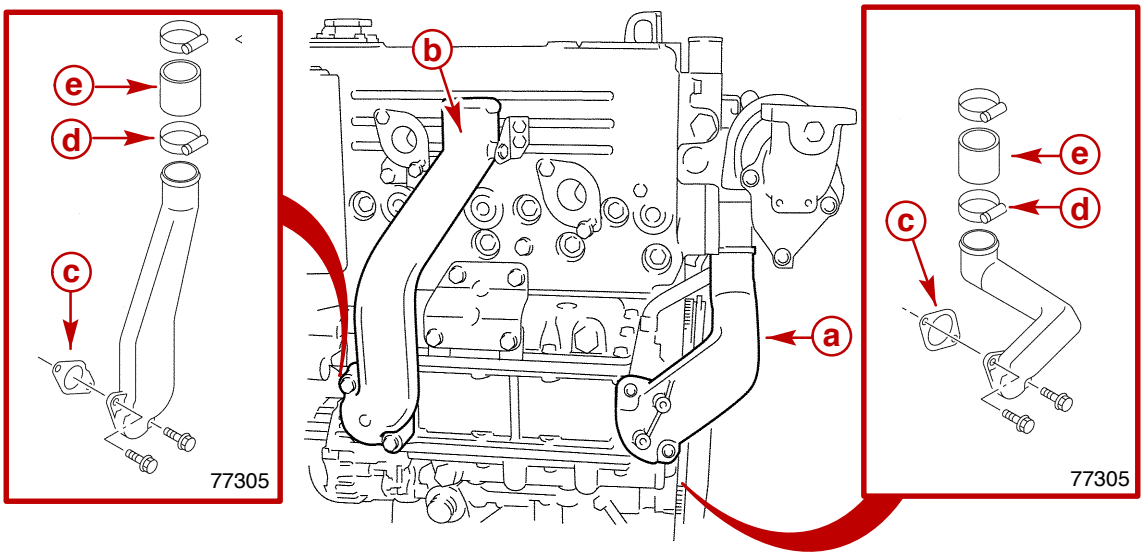

77311

a - Turbocharger Air Duct
b - Intercooler Air Duct
c - Gasket
d - Clamps
e - Connection Hose

Description		Nm	lb-in.	lb-ft
Bolt, Turbocharger or Intercooler Air Duct	M8 x 1.25	19	168	

6. Install water hose, and fluid cooler if equipped, from intercooler to heat exchanger front cover.

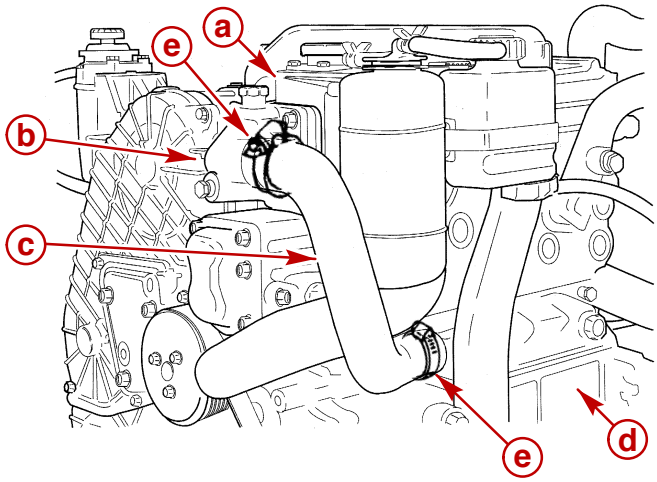

a - Heat Exchanger
b - Front Cover
c - Water Hose (And Fluid Cooler If Equipped)
d - Intercooler
e - Clamps

7. Connect the seawater inlet hose to the intercooler.
8. Connect battery cables.
9. Unplug and connect seawater inlet hose, or open seacock, if equipped.

⚠ CAUTION

Avoid seawater pickup pump impeller damage. DO NOT operate engine without cooling water being supplied to seawater pickup pump.

10. Ensure that seawater pickup pump is supplied cooling water.
11. Start engine and check for leaks.

THIS PAGE IS INTENTIONALLY BLANK

THIS PAGE IS INTENTIONALLY BLANK

INTAKE AND EXHAUST SYSTEM

Section 7B - Exhaust

Table of Contents

7
B

THIS PAGE IS INTENTIONALLY BLANK

Torque Specifications

Description		Nm	lb-in.	lb-ft
Bolt, Intercooler-To-Heat Exchanger	M10 x 1.5	44		32
Bolt, Heat Exchanger	M8 x 1.25	19	168	
Nut, Heat Exchanger	M8 x 1.25	19	168	
Bolt, Water Pipe (Front or Rear)	M8 x 1.25	24		18
Clamp, Exhaust Elbow / Riser	M8	10	88	
Hose Coupling, Straight	NPSF 3/4 in.	50		37
Bolts, Exhaust Pipe		30		22

Precautions

⚠ CAUTION

If boat is to remain in the water, seacock must remain closed until engine is to be restarted to prevent water from flowing back into seawater cooling system. If boat is not fitted with a seacock, water inlet hose must be disconnected and plugged to prevent water from flowing into cooling system and/or boat. As a precautionary measure, attach a tag to the key switch or steering wheel with the warning that the seacock must be opened or the water inlet hose reconnected prior to starting the engine.

⚠ CAUTION

Seawater (raw water) section of cooling system MUST BE COMPLETELY drained for winter storage or immediately after cold weather use, if the possibility of freezing temperatures exist. Failure to comply may result in trapped water causing freeze and/or corrosion damage to engine.

⚠ CAUTION

DO NOT operate engine without water flowing through the seawater pickup pump, as pump impeller may be damaged and subsequent overheating damage to engine or sterndrive unit may result.

General Information

Some of the repairs in this section may need to be completed with engine removed from boat. Engine removal depends upon type of repair and boat design. Place engine on a repair stand for major repairs.

When engine removal is not required, make certain that battery cables are disconnected at the battery prior to performing any on-board service or repair procedures.

⚠ WARNING

Always disconnect battery cables from battery BEFORE working around electrical system components to prevent injury to yourself or damage to electrical system should a wire be accidentally shorted.

All diesel engines covered in this manual use an exhaust manifold incorporated into the lower part of the heat exchanger in a single unit. Fresh water from the closed cooling system is pumped by the engine water pump through the combined heat exchanger and exhaust manifold when the engine is operating.

When reference is made to the exhaust manifold, keep in mind that it includes the exhaust air passages (or exhaust manifold) and heat exchanger cooling system.

Additionally, the exhaust manifold / heat exchanger includes a flange for mounting a turbocharger with a boost wastegate and valve assembly.

Special Information

IMPORTANT: It is required that the exhaust elbow / riser clamp be torqued after the first 50 hours of operation, and then every 100 hours or annually whichever comes first.

Description		Nm	lb-in.	lb-ft
Clamp, Exhaust Elbow / Riser	M8	10	88	

Exploded Views

Exhaust Manifold / Heat Exchanger and Related Components

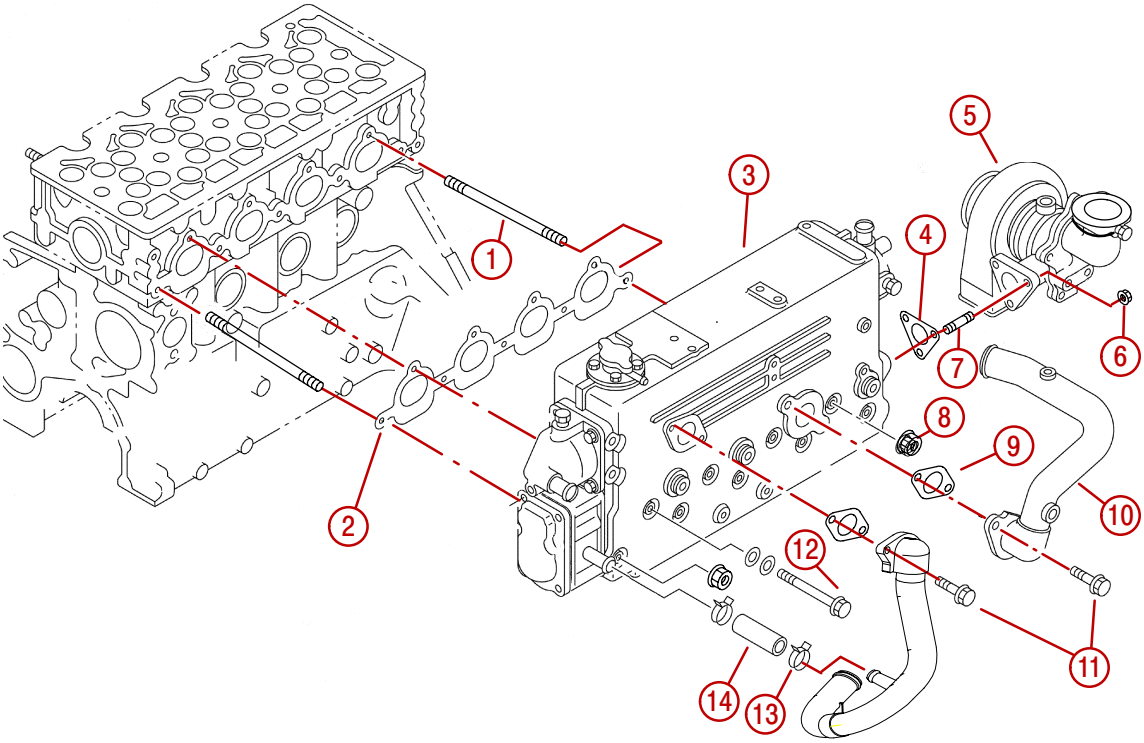

77760

1 - Stud, Heat Exchanger
2 - Gasket, Exhaust Manifold
3 - Exhaust Manifold / Heat Exchanger
4 - Gasket, Turbocharger
5 - Turbocharger
6 - Nut, Turbocharger
7 - Stud, Turbocharger
8 - Nut, Heat Exchanger
9 - Gasket, Water Pipe
10 - Water Pipe
11 - Bolt, Water Pipe
12 - Bolt And Washers, Heat Exchanger
13 - Clamp
14 - Hose

MCM (Sterndrive) Exhaust Pipe and Related Components

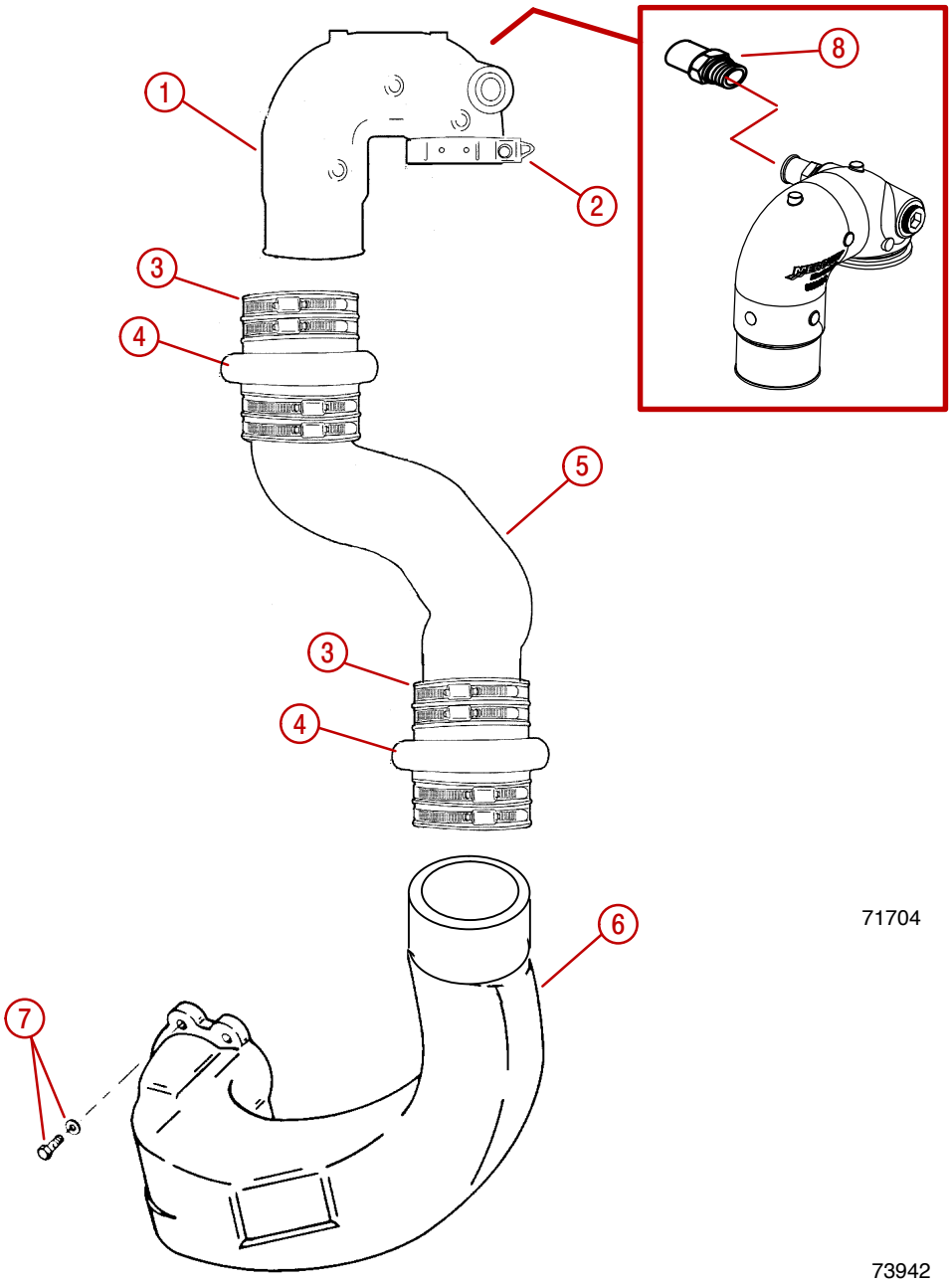

1 - Exhaust Riser / Elbow
2 - Clamp, Exhaust Elbow
3 - Clamp, Bellows (4 Total Each Hose)
4 - Exhaust Hose
5 - Intermediate Exhaust Pipe
6 - Lower Exhaust Pipe (No Water Shutter Assembly)
7 - Screw And Lockwasher (4)
8 - Hose Coupling, Straight

Exhaust Pipe - Sterndrive

Removal

IMPORTANT: Engine must be removed to gain access to exhaust pipe. Refer to SECTION 2A for engine removal and installation.

1. Remove 4 bolts and thick lockwashers retaining exhaust pipe to gimbal housing.
2. Remove lower exhaust pipe.
3. Remove O-ring seal from gimbal housing and discard.

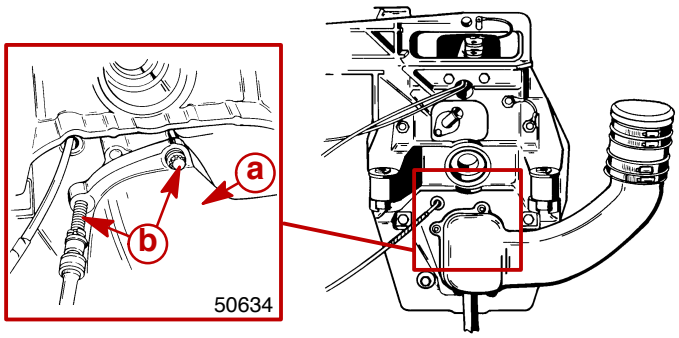

22054

a - Bolts And Thick Lockwashers (4)
b - Exhaust Pipe

Installation

1. After cleaning mating surfaces, install new O-ring. Be certain O-ring is seated properly in groove of gimbal housing.

NOTE: *The O-ring may have to be secured to gimbal housing using heavy grease or equivalent.*

⚠ CAUTION

Exhaust pipe and gimbal housing assembly mating surfaces must be clean and free of nicks and scratches. O-ring must be properly seated in groove, or water and exhaust may leak into boat.

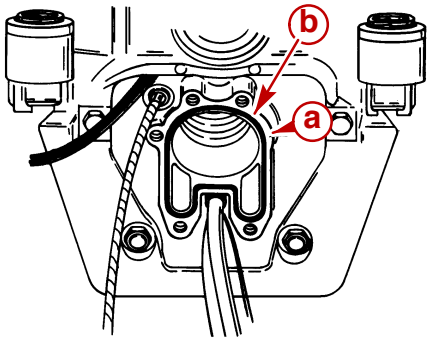

22030

a - Mating Surface (Similar On Exhaust Pipe)
b - O-ring

2. Hold lower exhaust pipe in position. Install thick washers and bolts (4 each). Torque evenly in a diagonal pattern.

Description	Nm	lb-in.	lb-ft
Bolts, Exhaust Pipe	30		22

3. Lubricate the inside of large end of exhaust hose with a soap and water solution. Slide hose over exhaust pipe and install two hose clamps. Tighten hose clamps securely.

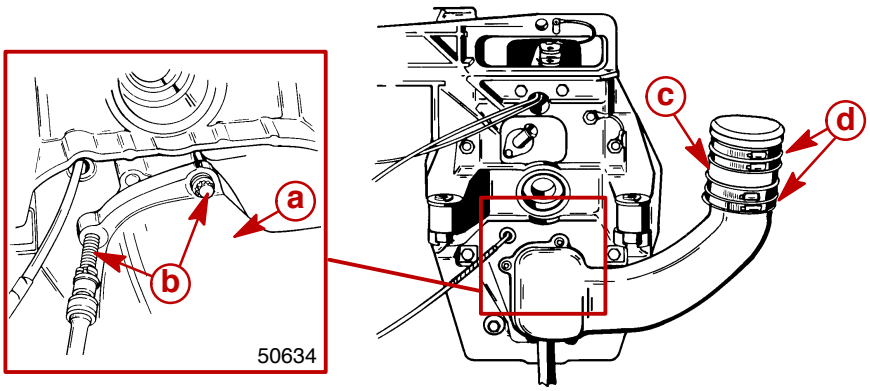

22054

a - Lower Exhaust Pipe
b - Bolts And Thick Lockwashers (4 each)
c - Exhaust Hose
d - Hose Clamps (4 Total)

Exhaust Manifold / Heat Exchanger

Removal

1. Close seacock, if equipped, or disconnect and plug seawater inlet hose, if boat is to remain in the water.
2. Refer to SECTION 1B and drain seawater from seawater cooling system.
3. Refer to SECTION 1B and drain coolant from closed cooling system.
4. Refer to SECTION 6A and remove heat exchanger.

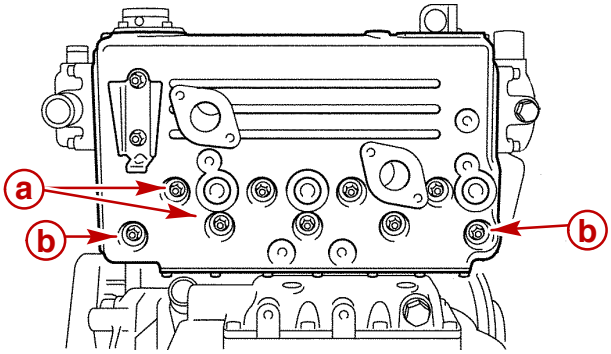

a - Bolt And Washers (7 Total)
b - Stud And Nut

Cleaning and Inspection

1. Clean gasket material from all surfaces and wash parts in solvent.
2. Inspect all parts carefully. Machined surfaces must be clean and free of all marks and deep scratches, which could cause water and exhaust leaks.
3. Check water passages for foreign material. Passages must be clean for efficient cooling.
4. Check for cracks.
5. To test exhaust manifold / heat exchanger for leaks, block off plates, plugs or short hoses with plugged ends must be used. One block off plate must have a threaded hole for attaching compressed air hose. Use new gaskets when installing block off plates. Apply 276 kPa (40 psi) of air pressure and submerge manifold in water. Air bubbles will indicate a leak.
6. If a more thorough inspection of the exhaust manifold and passages is required, the cover on the bottom of the heat exchanger may be removed. However, a new gasket will be required for reassembly.

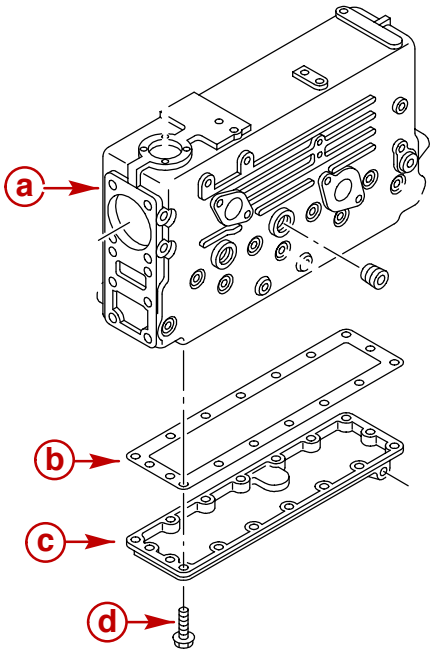

77723

a - Exhaust Manifold / Heat Exchanger
b - Gasket
c - Cover
d - Bolt

Description	Nm	lb-in.	lb-ft
Bolt, Cover	Not Available At Time Of Printing		

Installation

1. Ensure mating surfaces of cylinder head are clean and free of all old gasket material. Machined surfaces must not have nicks or gouges, which could cause water and exhaust leaks.
2. Install cylinder head-to-exhaust manifold / heat exchanger gasket on cylinder head studs.
3. Install exhaust manifold / heat exchanger. Torque bolts and nuts evenly in a diagonal pattern.
4. Install intercooler-to-heat exchanger bracket. Torque bolts.

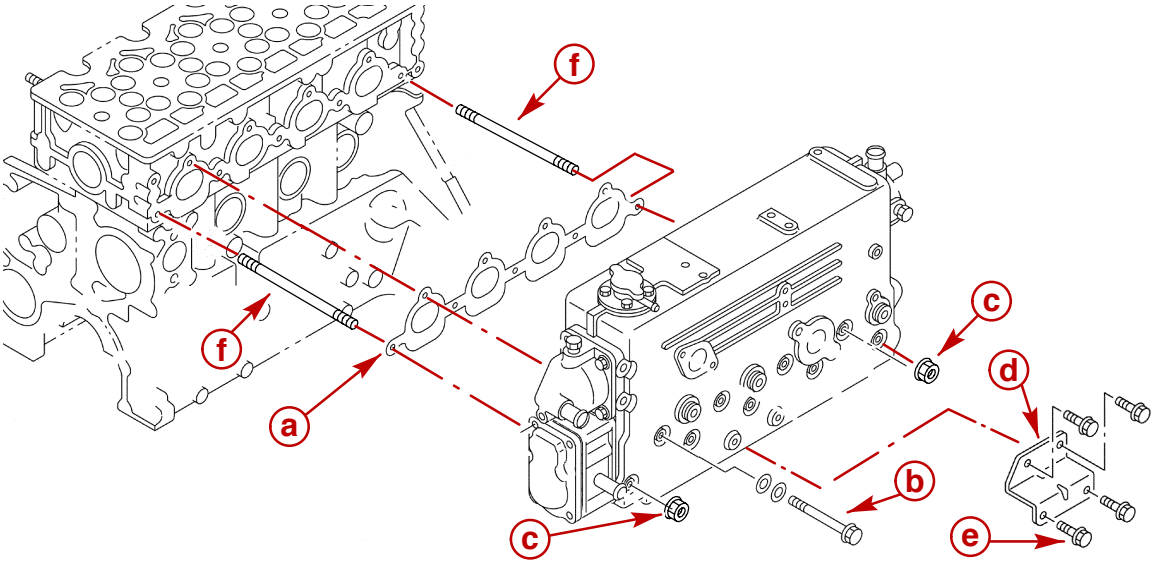

a - Gasket
b - Bolt And Washers (7 Total)
c - Nut (2 Total)
d - Intercooler To Heat Exchanger Bracket
e - Bolt
f - Stud

Description		Nm	lb-in.	lb-ft
Bolt or Nut, Exhaust Manifold / Heat Exchanger	M8 x 1.25	19	168	
Bolt, Intercooler-to-heat Exchanger Bracket	M10 x1.5	44		32

5. Install the turbocharger gasket and turbocharger assembly. Refer to SECTION 7C.
6. Install the remaining heat exchanger related components. Refer to SECTION 6A.

7. Ensure all exhaust hose clamps are tightened securely.

⚠ CAUTION

Avoid exhaust hose failure. Discharge water from exhaust elbow must flow around entire inside diameter of hose to avoid causing hot spots which could eventually result in burned-through exhaust hoses. Exhaust hoses and/or tubes must be correctly connected to exhaust elbows so that they do not restrict the flow of discharge water from exhaust elbow.

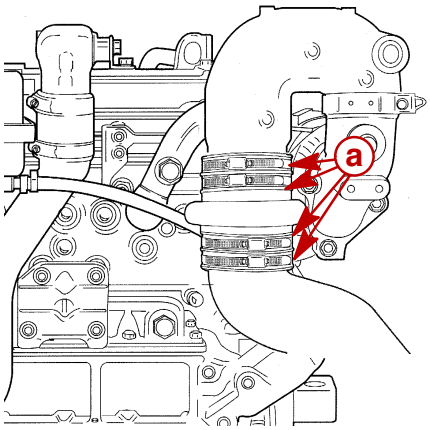

77347

a - Exhaust Hose Clamps

8. Fill closed cooling system. Refer to SECTION 6A.
9. Connect battery cables.
10. Unplug and connect seawater inlet hose, or open seacock, if equipped.

⚠ CAUTION

Avoid seawater pickup pump impeller damage. DO NOT operate engine without cooling water being supplied to seawater pickup pump.

11. Ensure that seawater pickup pump is supplied cooling water.
12. Start engine and check for leaks.

THIS PAGE IS INTENTIONALLY BLANK

THIS PAGE IS INTENTIONALLY BLANK

INTAKE AND EXHAUST SYSTEM

Section 7C - Turbocharger

Table of Contents

7
C

THIS PAGE IS INTENTIONALLY BLANK

Identification

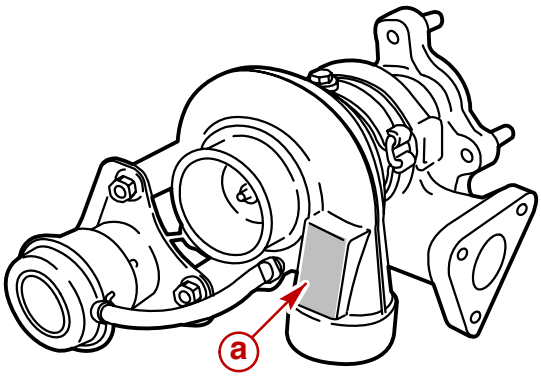

77391

a - Identification Number Location

Specifications

Model		D1.7L DTI
Manufacturer		Mitsubishi
Part Number	Manufacturer	Not Available At Time Of Printing
	Quicksilver	882562
Maximum turbine shaft axial (end) play		Not Available At Time Of Printing
Maximum turbine shaft radial (side) play		
Maximum Boost		1 kPa (17.2 psi) at 4400 rpm
Engine rpm when boost starts		Not Available At Time Of Printing
Wastegate		pneumatic / mechanical

Torque Specifications

Description		Nm	lb-in.	lb-ft
Bolt, Hollow, Oil Feed Pipe To Cylinder Block		9.8	87	
Bolt, Hollow, Oil Feed Pipe To Turbocharger		9.8	87	
Clamp, Special, Exhaust Elbow		10	88	
Plug, Exhaust Housing				
Nut, Exhaust Housing	M10 x 1.25	44		32
Nut, Turbocharger	M10 x 1.5	44		32
Bolt, Air Duct	M8 x 1.25	19	168	
PCV Bracket	M8 x 1.25	19	168	

Lubricants / Sealants / Adhesives

Description	Where Used	Method of Use	Part Number
Quicksilver Perfect Seal	Air duct plug	Thread length	92-64277--1
Anti-seize Compound	Turbocharger exhaust housing to turbine house stud	Thread length	Obtain Locally

Precautions

⚠ WARNING

When using compressed air to dry components, DO NOT spin turbine, or allow turbine to spin, since no oil is being provided to the bearings and could result in damage to the bearings.

⚠ CAUTION

Do not operate engine without cooling water being supplied to the seawater pickup pump, or pump impeller will be damaged.

⚠ CAUTION

Always wear safety glasses to protect from hose rupturing or flying debris when using compressed air.

⚠ CAUTION

Safety glasses, gloves and protective clothing should be worn while testing turbocharger boost pressure, to protect against pressurized air being released by a leak or rupture of a hose which could cause injury.

Exploded View - Turbocharger and Related Parts

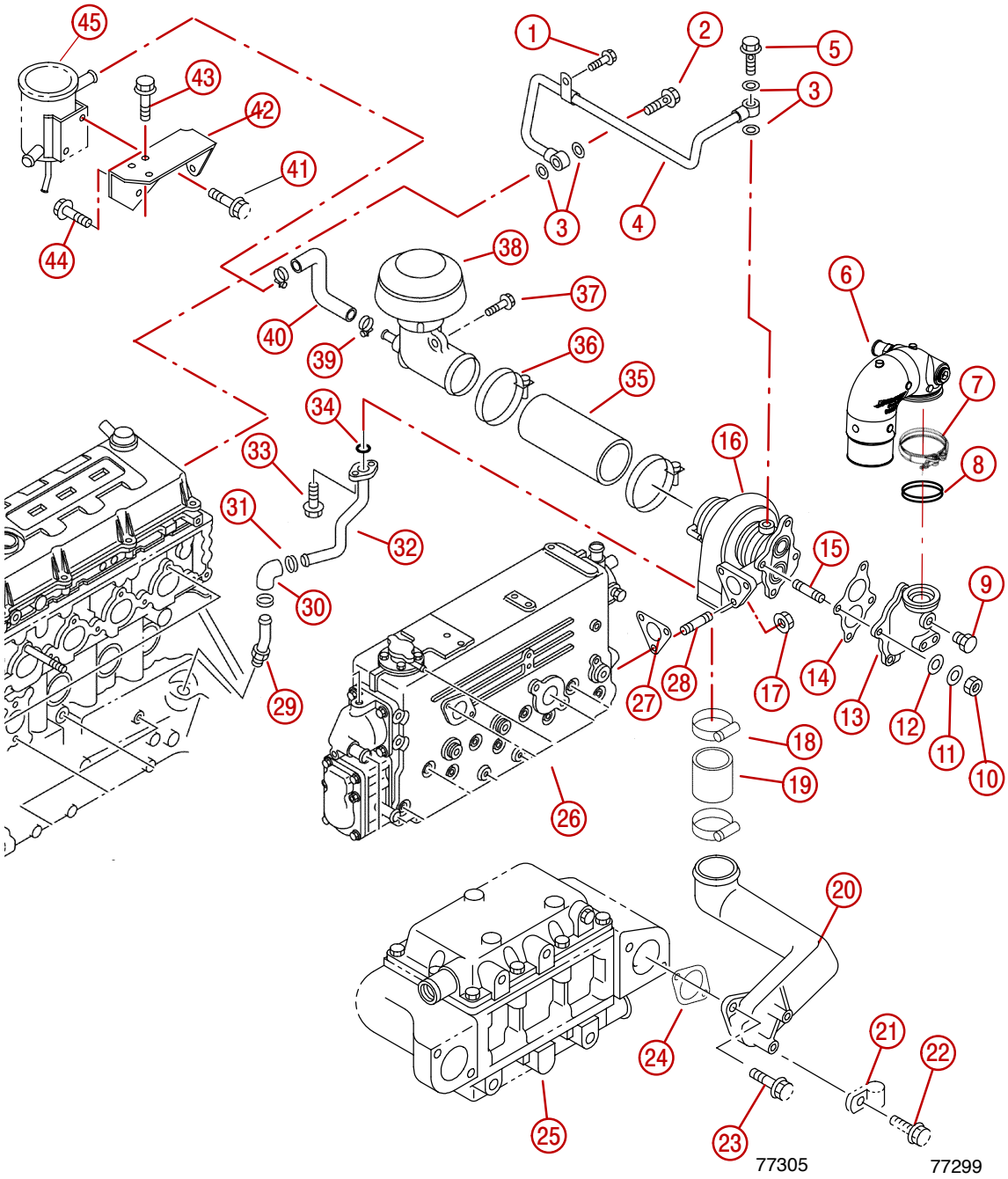

1 - Clamp Bolt
2 - Hollow Bolt
3 - Sealing Washer
4 - Oil Feed Pipe
5 - Hollow Bolt
6 - Exhaust Elbow, or Riser (Not Shown)
7 - Clamp
8 - Gasket
9 - Plug
10 - Nut
11 - Lock Washer
12 - Flat Washer
13 - Exhaust Housing
14 - Gasket
15 - Stud, Exhaust Housing
16 - Turbocharger
17 - Nut And Jam Nut
18 - Clamp
19 - Connection Hose
20 - Air Duct
21 - Wire Harness Clip
22 - Air Duct Bolt
23 - Air Duct Bolt
24 - Gasket, Air Duct
25 - Intercooler
26 - Heat Exchanger
27 - Gasket, Turbocharger to Heat Exchanger
28 - Stud, Turbocharger
29 - Fitting
30 - Oil Pipe Connector
31 - Clamp
32 - Return Oil Pipe
33 - Bolt
34 - O-ring
35 - Connection Hose
36 - Clamp
37 - Clamp Bolt
38 - Air Cleaner
39 - Clamp
40 - PCV (Positive Crankcase Ventilation) Hose
41 - Bolt
42 - PCV Bracket
43 - Bracket Top Bolt
44 - Bracket Side Bolt
45 - PCV Oil Separator And Bracket

Description

General Information

All diesel engines covered in this manual are equipped with a turbocharger to boost intake pressure, resulting in increased horsepower. In one casing on the turbocharger housing exhaust gases are used to spin the turbine up to 100,000 rpm. The compressor, which is installed on the same shaft but in a separate casing, draws in filtered air, compresses it and delivers it to the engine through an intake duct and intercooler.

The turbo bearings are lubricated by engine oil.

The turbocharger housing, while the exhaust elbow is cooled by seawater flowing through it from the seawater system.

Turbo pressure is limited by a boost pressure control valve (wastegate) designed into the turbine/exhaust housing of the turbocharger.

Boost Pressure Control (Wastegate)

The function of the wastegate is to limit the boost pressure generated by the turbocharger within a controlled tolerance band.

When factory set boost pressure is exceeded, the valve opens and bypasses a part of the exhaust gas flow around the turbine. The resulting reduced mass-flow produces a lower power output. The compressor output is reduced in proportion and the boost pressure falls to the predetermined level. This control process is repeated for each change in engine load.

This allows the use of a smaller turbocharger turbine which provides better acceleration and torque, as boost comes on more rapidly and turbo lag is reduced.

NOTICE
Read Precautions at front of this SECTION before proceeding.

Removal

1. Remove water hose from exhaust elbow hose coupling.
2. Loosen upper hose clamps retaining exhaust elbow to intermediate pipe.
3. Loosen hose clamps and remove air intake hose from air cleaner.
4. Loosen hose clamps and remove air hose to intercooler air duct.
5. Remove turbocharger oil feed line. Collect oil from feed line in a suitable container.
6. Remove turbocharger oil return pipe.

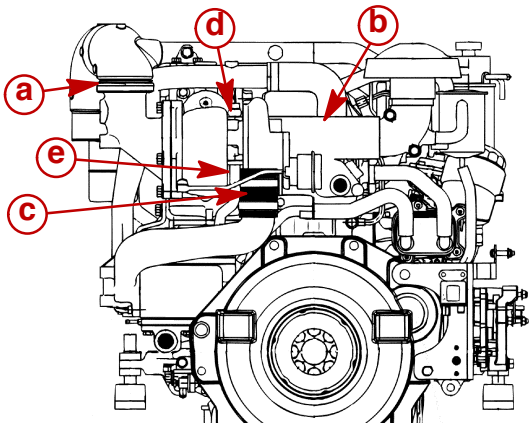

77122

a - Exhaust Elbow
b - Air Intake Hose From Air Cleaner
c - Air Hose To Intercooler Air Duct
d - Oil Feed Line
e - Oil Return Pipe

7. Loosen turbocharger fastening nuts.

IMPORTANT: Ensure that nothing enters the turbocharger openings. Plug turbocharger openings after removal.

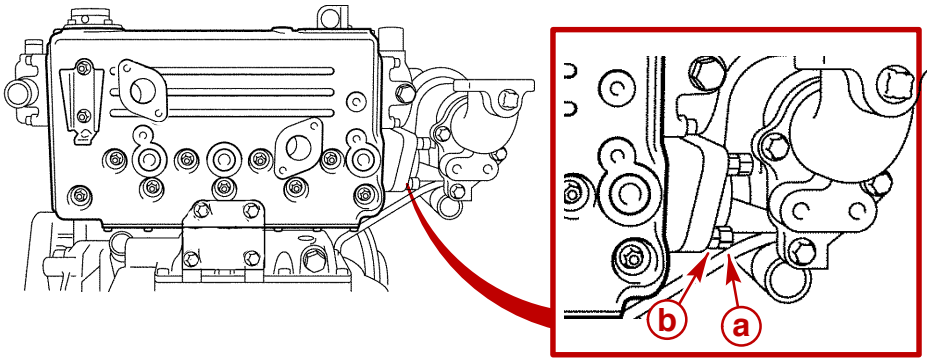

77134

a - First Nut
b - Jam Nut

8. Remove the turbocharger assembly.

IMPORTANT: Do not drop anything into turbocharger openings. Plug the turbocharger openings to prevent the entry of foreign material or dust.

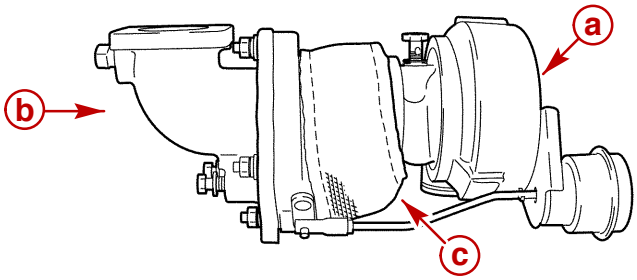

77309

a - Turbocharger
b - Exhaust Housing
c - Heat Shield Blanket

Minor Disassembly

1. Remove exhaust elbow clamp.
2. Remove exhaust elbow and gasket from exhaust housing.
3. Remove hose coupling if needed.
4. Remove exhaust housing nuts. Remove exhaust housing from turbine housing. Discard old gasket.

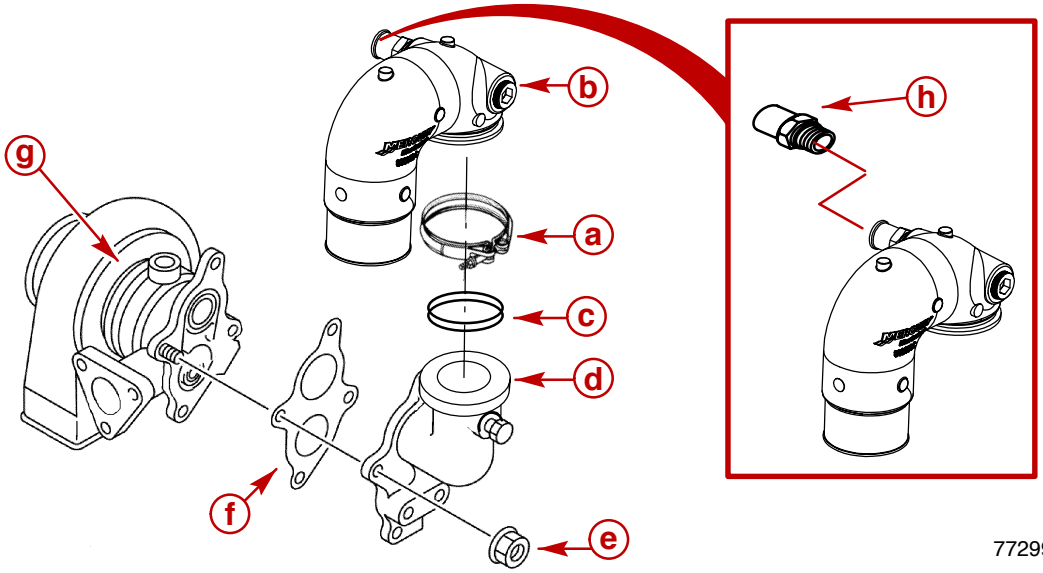

77299

a - Clamp
b - Exhaust Elbow
c - Elbow Gasket
d - Exhaust Housing
e - Nut
f - Gasket
g - Turbine Housing
h - Hose Coupling

Inspection

1. Ensure that housing bolts are tight.
2. Rotate the turbine impeller by hand to ensure that it turns smoothly. If not, turbine bearings or impeller problems exist. Replace turbocharger.
3. Inspect turbine blades and housing for signs of burning or cracking. If these signs are found, replace turbocharger.
4. Using a feeler gauge as shown, check clearance between turbine blades and housing at two locations opposite one another. The difference in the two readings is the radial play.

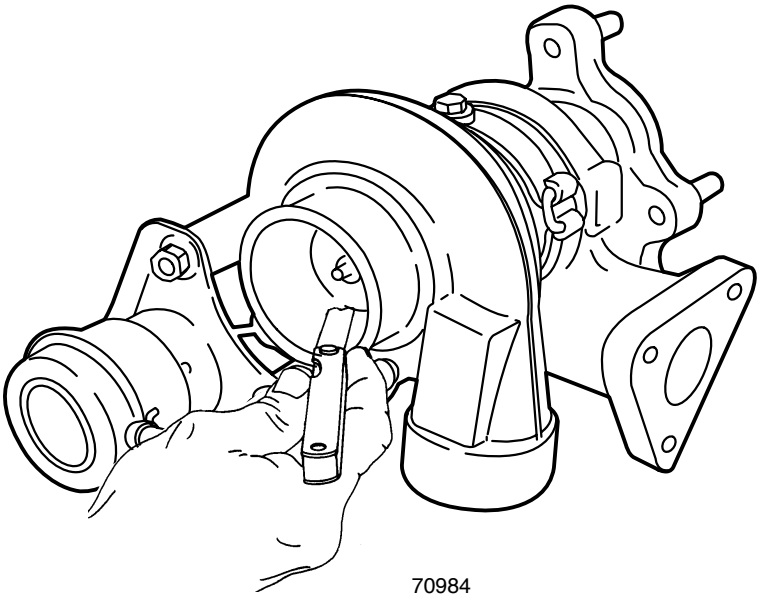

70984 77391

Checking Turbine Blade Clearance

5. Ensure that turbine blades are not rubbing on housing. If signs of wear are found, replace turbocharger .
6. Check the turbine wheel for carbon deposit. Clean with appropriate solvent.

Cleaning

IMPORTANT: Never use a caustic cleaning solution, as it may attack aluminum. Also, never use a wire brush which could damage impeller or mating surfaces.

1. Thoroughly clean all the parts with clean diesel fuel, using a soft brush. Dry with compressed air.

Reassembly

1. Install a new gasket on the turbine housing studs.
2. Apply a coat of anti-seize compound to threads of studs.
3. Install exhaust housing on turbine housing.
4. Install housing washers. First, the flat washer, then the conical washer with (concave side towards turbine housing) Torque exhaust housing nuts in a cross pattern to value specified.

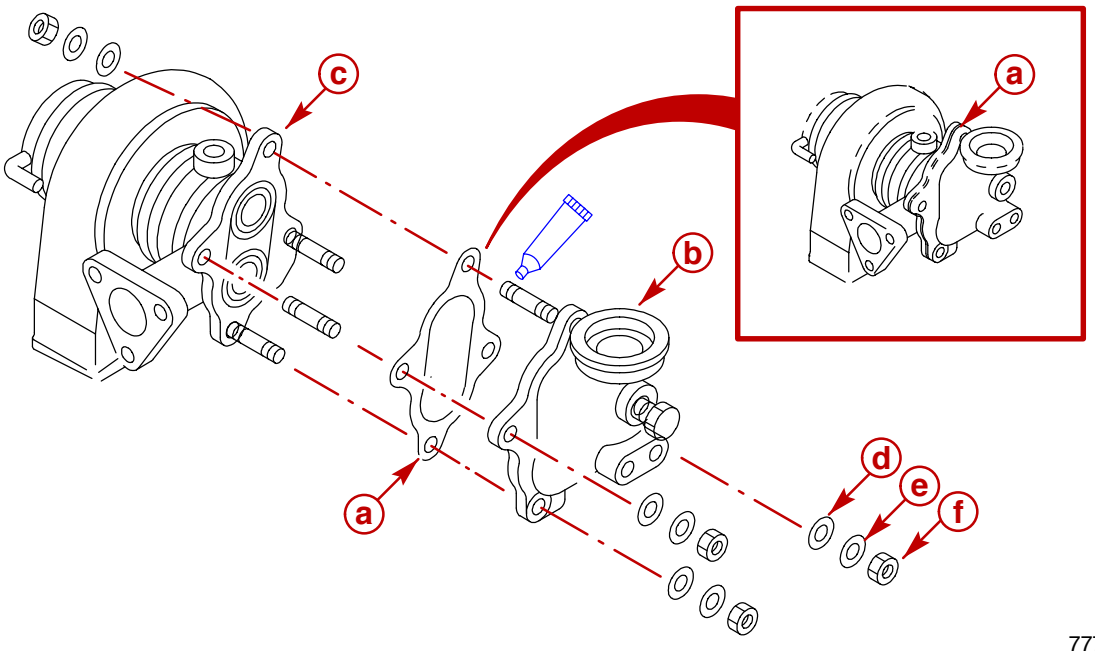

77749

a - Gasket
b - Exhaust Housing
c - Turbine Housing
d - Flat Washer
e - Conical Washer
f - Nut

Description		Nm	lb-in.	lb-ft
Nut, Exhaust Housing	M10 x 1.25	44		32

Description	Where Used	Method of Use	Part Number
Anti-seize Compound	Turbocharger exhaust housing to turbine house stud	Thread length	Obtain Locally

5. Install new round gasket and exhaust elbow on exhaust housing. Temporarily only hand tighten the clamp to allow movement during installation.

Installation

1. Install the turbocharger gasket on exhaust manifold / heat exchanger studs.

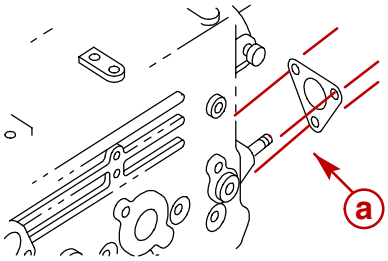

77299

a - Gasket

2. Install turbocharger assembly. Tighten nuts evenly to specified torque.

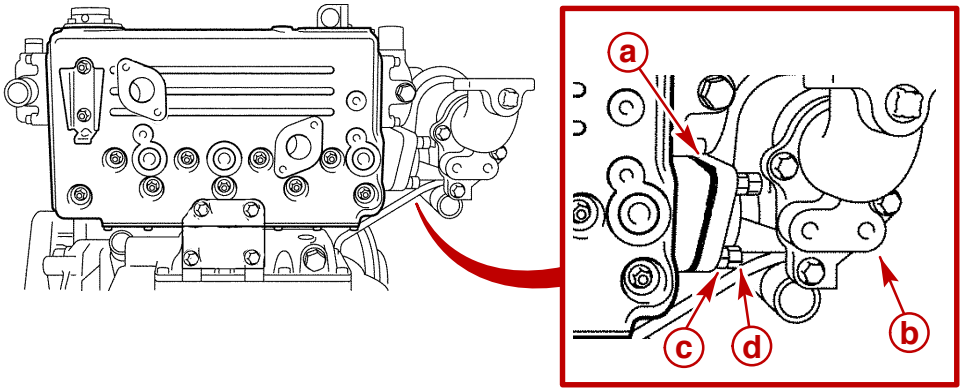

77134

a - Gasket
b - Turbocharger Assembly
c - Primary Nut
d - Jam Nut

Description		Nm	lb-in.	lb-ft
Primary Nut, Turbocharger	M10 x1.25	44		32
Jam Nut, Turbocharger	M10 x 1.25	44		32

3. Install oil feed pipe with new seal washers. Torque hollow bolt.
4. Install oil drain pipe with new O-ring seal. Torque bolts.

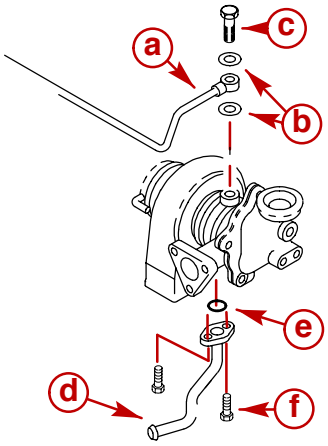

77393

a - Oil Feed Pipe
b - Sealing Washers
c - Hollow Bolt
d - Oil Drain Pipe
e - O-ring
f - Bolt

Description	Nm	lb-in.	lb-ft
Bolt, Hollow, Oil Feed Pipe To Turbocharger	9.8	86	
Bolt, Oil Drain Pipe To Turbocharger	9.8	86	

5. Clamp connection hose between air cleaner duct and turbocharger.
6. Install exhaust elbow with new gasket and special clamp.
7. Ensure exhaust hose is properly aligned and tighten hose clamps on exhaust elbow.

8. Torque exhaust elbow special clamp.

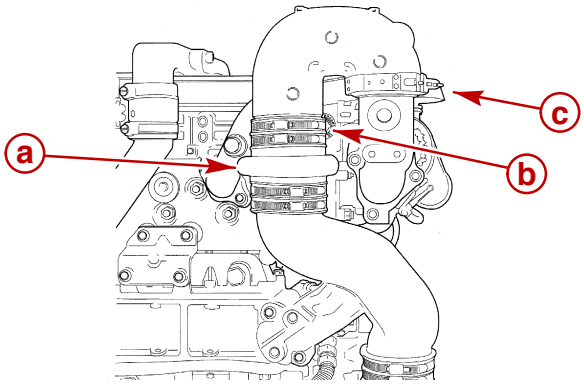

77346

a - Exhaust Hose
b - Hose Clamps
c - Special Clamp

Description	Nm	lb-in.	lb-ft
Clamp, Special, Exhaust Elbow	10	88	

9. Check oil level. Add specified oil to bring level up to, but not over, maximum oil level mark -MAX- on dipstick.

IMPORTANT: Always use dipstick to determine how much oil is required.

10. Connect battery cables to battery by FIRST installing positive (+) battery cable end on positive (+) battery terminal. Tighten clamp securely. THEN install negative (-) battery cable end on negative (-) battery terminal. Tighten clamp securely.

IMPORTANT: After service, pre-lubricate turbocharger and engine. To do this, engage the STOP switch and hold in position while you turn the key switch to START. Doing this *together* turns the engine without starting it. Avoid overheating the starter. DO NOT engage starter for more than 15 seconds; allow at least one minute cool down time before re-engaging starter for another 15 seconds. Pre-lubrication is complete when oil pressure is shown by instruments.

11. Crank engine intermittently until oil pressure registers on oil gauge. DO NOT engage starter for more than 15 seconds at one time. Allow at least one minute for starter to cool before reusing.

12. Supply cooling water to the engine.

13. Start engine and check for leaks.

Boost Pressure Control (Wastegate)

IMPORTANT: Before suspecting the turbocharger for engine running problems, the fuel injection system and engine mechanicals (valves, camshaft) must be in good working order.

Testing

The following should be observed prior to testing:

- Engine should be at normal operating temperature.
- Engine air cleaner should be clean (or replaced if not clean).

1. Remove plug from intake manifold air duct.

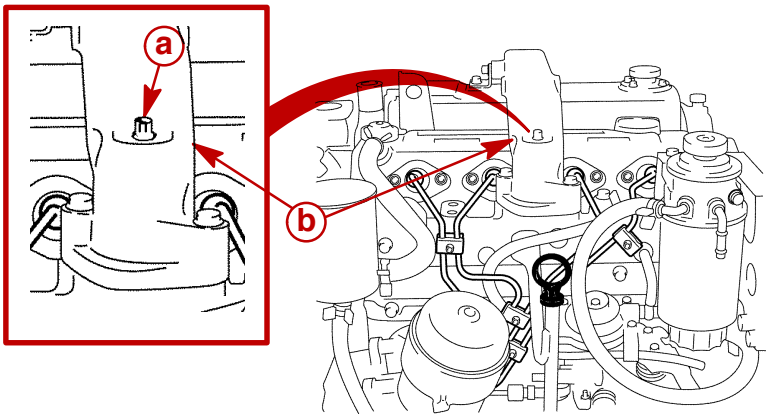

77314

Typical

a - Plug
b - Air Duct

2. Install a 0-172.4 kPa (0-25 psi) pressure gauge into air duct where plug was removed in Step 1.
3. Start engine and watch pressure gauge.
4. Readings LOWER than specified indicate possible turbocharger problems, or boost pressure control system problems IF no engine problem exists, such as incorrect valve clearance or a blockage in the exhaust system (refer to appropriate sections in this manual, including SECTION 1C). NO boost pressure would indicate a faulty turbocharger requiring replacement.
5. When testing is complete remove gauge.
6. Coat threads of plug with Loctite Pipe Sealant with Teflon and install. Tighten securely.

Description	Where Used	Method of Use	Part Number
Loctite 592 Pipe Sealant with Teflon	Air duct plug	Thread length	Obtain Locally

THIS PAGE IS INTENTIONALLY BLANK

THIS PAGE IS INTENTIONALLY BLANK

POWER STEERING

Section 8A

Table of Contents

8
A

Specifications

Torque

NOTE: *Securely tighten all fasteners not listed below.*

Description		Nm	lb-in.	lb-ft
Bolt, Upper and Lower Mount Bracket	M10x1.5x70	51		37
Nut, Trunion Clamping	M10x1.5x70	57		42
Bolt, Pump Mounting, Front and Rear	M8x1.25x25	21		15
Bolt, Brace Lower	M8x1.25x25	21		15
Bolt, Brace Upper	M10x1.5x40	34		25
Bolt, Drive Pulley	M6x1.0x30	14	124	
Bolt, Bracket, Heat Exchanger to Intercooler	M10x1.5x25	44		32
Pump Hose Fitting	At Pump	31		23
Fluid Hose Fittings	At Control Valve	31		23

Lubricants / Sealants / Adhesives

Description	Where Used	Method of Use	Part Number
Power Trim And Steering Fluid (or Equivalent)	Steering System	Fill system	92-802880Q1
Special Lubricant 101	Upper and lower pivot bolts	Thread length	92-802865Q1
Transmission Fluid Dexron III (or Equivalent)	Steering System	Fill system	Obtain Locally

Special Tools

Description	Part Number
Power Steering Test Gauge	91-38053A4
Power Steering Pump Pulley Installer	91-93656A1

KENT-MOORE SPECIAL TOOLS	
Kent-Moore Tools, Inc. 29784 Little Mack Roseville, MI 48066 Phone: (313) 774-9500	
Description	**Part Number**
Power Steering Pump Pulley Remover	J-25034

Refer to appropriate Mercury MerCruiser Sterndrive Service Manual for additional information and procedures on the complete power steering system, if not covered in this section.

Precautions

⚠ CAUTION

Do not operate engine without cooling water being supplied to water pickup pump or water pump impeller will be damaged and subsequent overheating damage to engine may result.

⚠ WARNING

Always disconnect battery cables from battery before working on engine to prevent fire or explosion.

⚠ CAUTION

Do not pry on power steering pump or alternator when adjusting belt tension. Serious damage may result.

Exploded Views

Power Steering Pump, Brackets and Fasteners

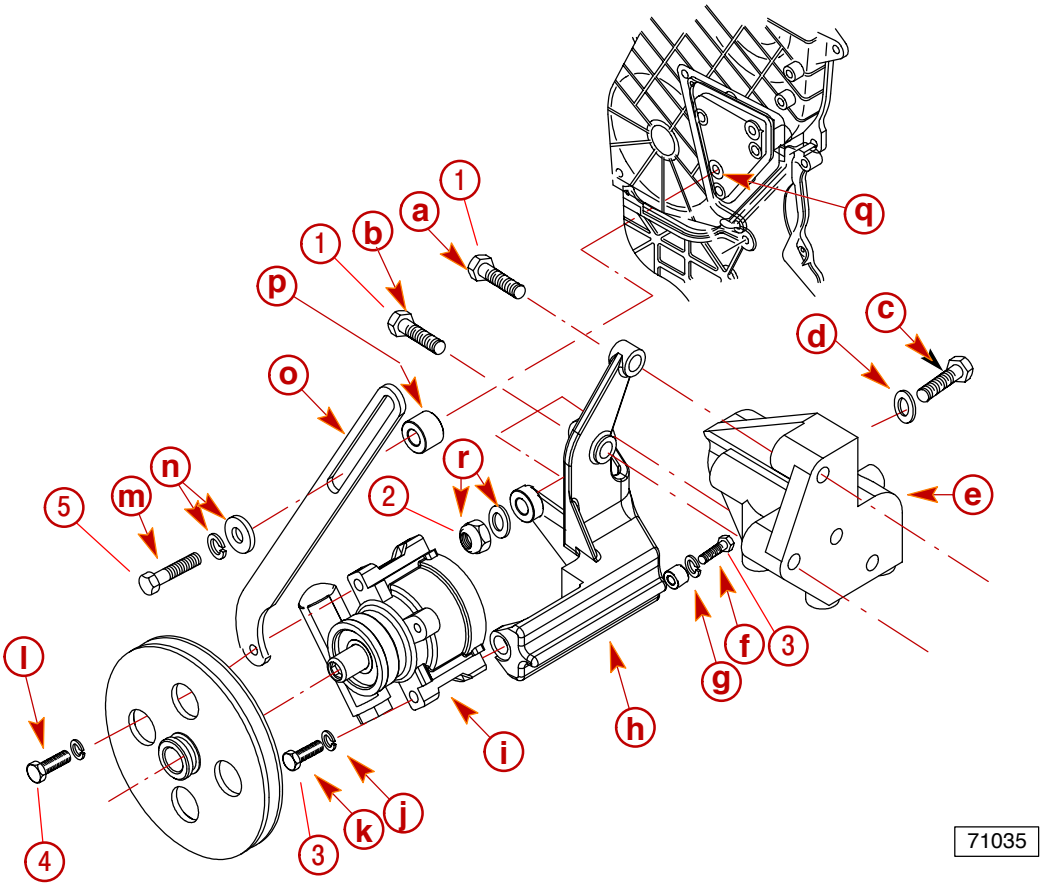

Exploded View

- **a** - Upper Mount Bracket Bolt
- **b** - Lower Mount Bracket Bolt
- **c** - Trunion Clamping Bolt
- **d** - Plain Washer
- **e** - Starboard Mount Bracket
- **f** - Pump Rear Mounting Bolt
- **g** - Lock Washer And Bushing
- **h** - Pump Bracket
- **i** - Pump and Pulley
- **j** - Lock Washer
- **k** - Pump Front Mounting Bolt
- **l** - Brace Lower Bolt and Lock Washer
- **m** - Brace Upper Bolt
- **n** - Plain Washer And Lock Washer
- **o** - Brace
- **p** - Spacer
- **q** - Engine Plate
- **r** - Lock Washer and Clamping Nut

Description			Nm	lb-in.	lb-ft
1	Bolt, Upper and Lower Mount Bracket	M10x1.5x70	51		37
2	Nut, Trunion Clamping	M10x1.5x70	57		42
3	Bolt, Pump Mounting, Front and Rear	M8x1.25x25	21		15
4	Bolt, Brace Lower	M8x1.25x25	21		15
5	Bolt, Brace Upper	M10x1.5x40	34		25

Fluid Hoses

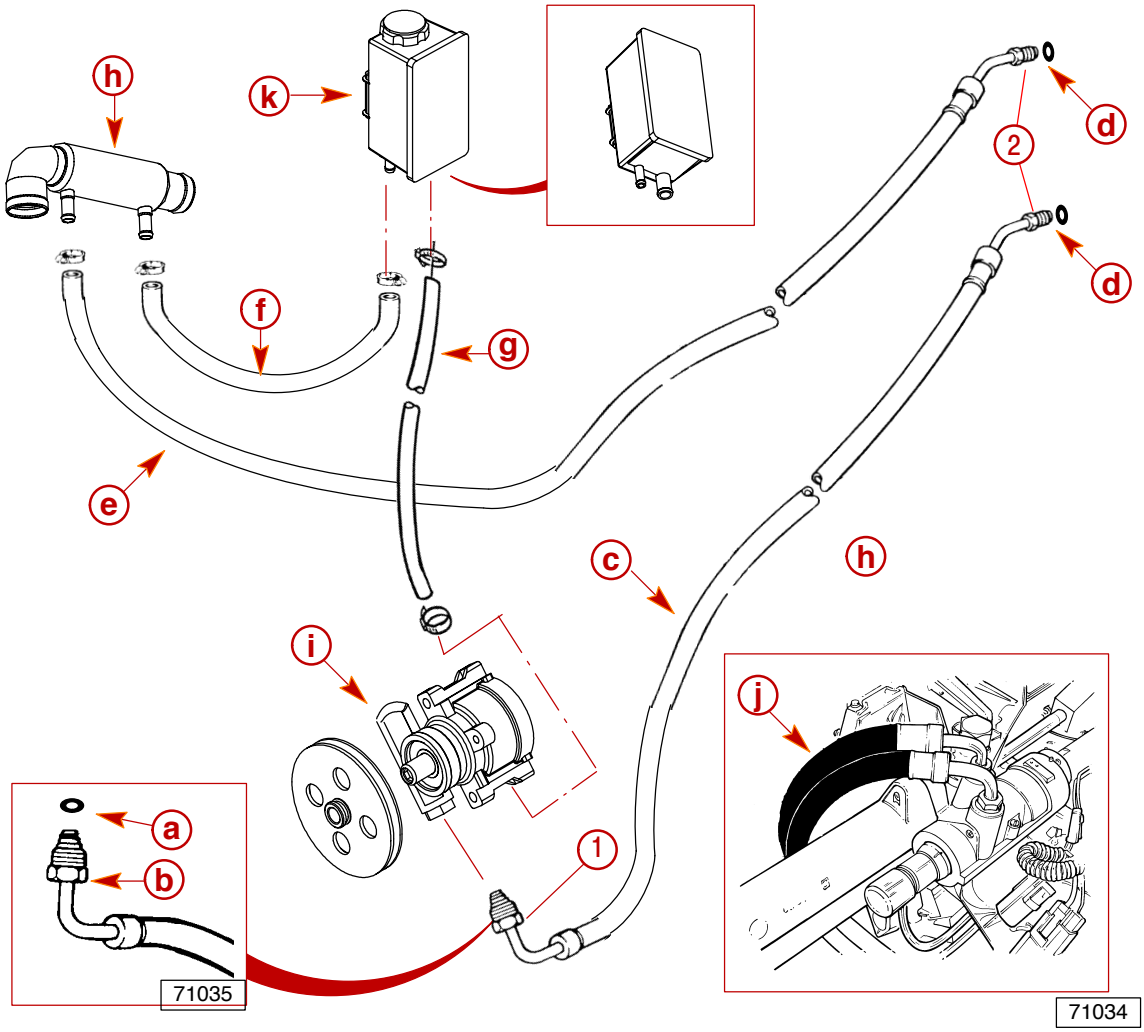

a - O-Ring
b - Pump Hose Fitting
c - High Pressure Fluid Hose
d - Fluid Hose Fittings
e - Low Pressure Fluid Hose
f - Return Hose
g - Supply Hose
h - Fluid Cooler
i - Pump And Pulley
j - Hose Positions
k - Fluid Reservoir Tank

Description			Nm	lb-in.	lb-ft
1	Pump Fitting	At Pump	31		23
2	Fluid Hose Fittings	At Control Valve	31		23

Power Steering Fluid Cooler, Water Hoses and Fluid Reservoir

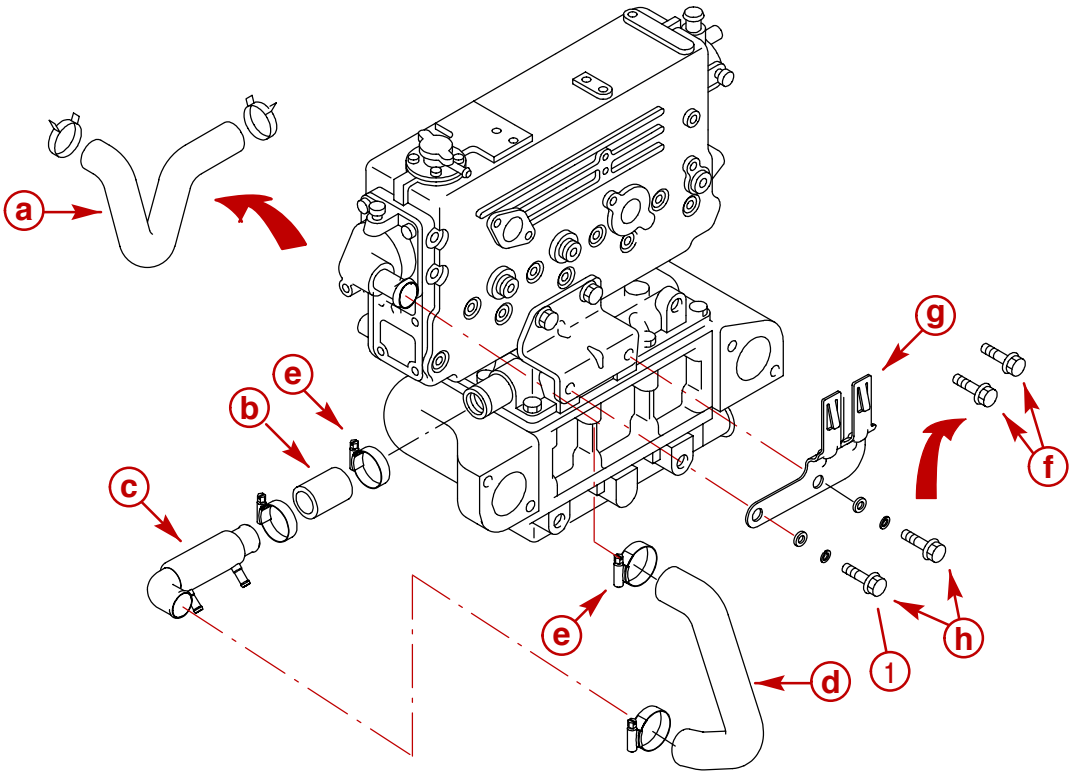

77734

a - Existing Water Hose
b - Short Water Hose
c - Fluid Cooler
d - Long Water Hose
e - Clamps
f - Existing Bolt
g - Reservoir Bracket
h - Longer Bolt (From Kit)

Description			Nm	lb-in.	lb-ft
1	Bolt, Bracket, Heat Exchanger to Intercooler	M10x1.5x25	44		32

Testing and Repair

Refer to appropriate MerCruiser Sterndrive Service Manual.

Checking Pump Fluid Level

Refer to SECTION 1B Maintenance.

Filling and Air Bleeding System

Refer to SECTION 1B Maintenance.

Pump Assembly

Removal

1. Remove fluid supply hose from power steering pump and plug with a suitable plug.
2. Remove high pressure hose from power steering pump and plug with a suitable plug.
3. Remove power steering brace nut and washers.
4. Remove power steering belt.

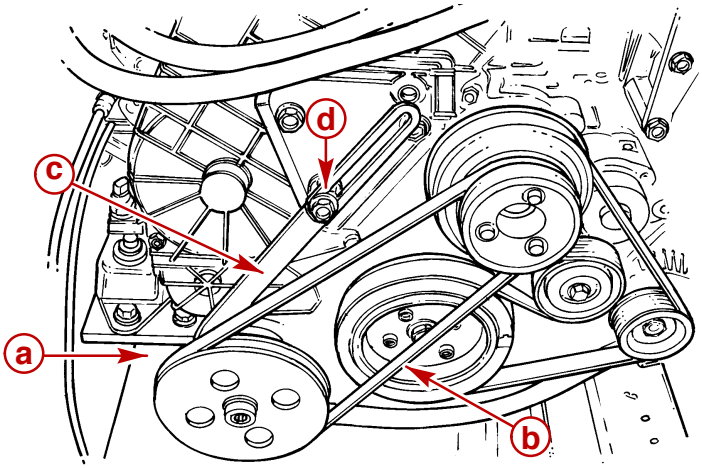

77321

a - Power Steering Belt
b - Power Steering Brace
c - Brace Nut And Washer

5. Remove the bolts attaching pump to power steering pump bracket.
6. Remove the power steering pump.

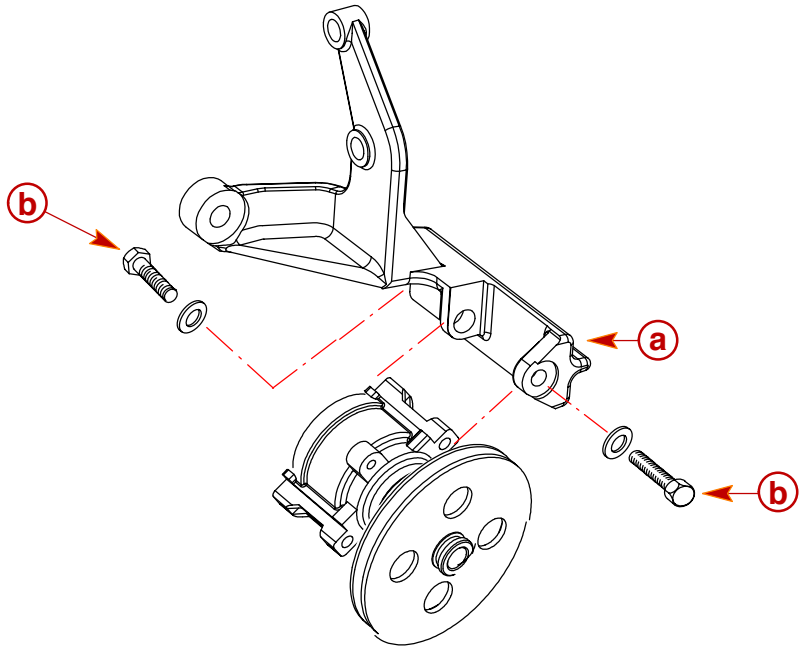

a - Pump Bracket
b - Front And Rear Mounting Bolts

Installation

1. Install the power steering pump to the power steering bracket. Torque fasteners.
2. Connect the pump hose fitting to the pump. Torque the fitting.
3. Connect the fluid return hose to the pump and secure with hose clamp.

Description		Nm	lb-in.	lb-ft
Bolt, Pump Mounting, Front and Rear	M8x1.25x25	21		15
Pump Hose Fitting	At Pump	31		23
Fluid Hose Fittings	At Control Valve	31		23

4. Install power steering brace.

Description		Nm	lb-in.	lb-ft
Bolt, Brace Lower	M8x1.25x25	21		15
Bolt, Brace Upper	M10x1.5x40	34		25

5. Reinstall drive belt and adjust tension. Refer to SECTION 1B.

Power Steering Pump Pulley Replacement

Removal

1. Install appropriate puller on end of pulley and shaft.
2. While holding tool with suitable wrench, turn threaded screw until pulley is removed.

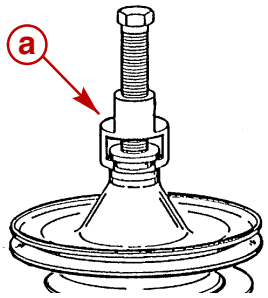

72821

Typical

a - Puller Tool

Installation

1. Place pulley on pump shaft.
2. Thread stud into pump shaft. Place bearing over stud.
3. Thread nut onto shaft.
4. Thread tool shaft (and nut) all the way onto stud.
5. Turn nut until face of pulley is flush with end of shaft.

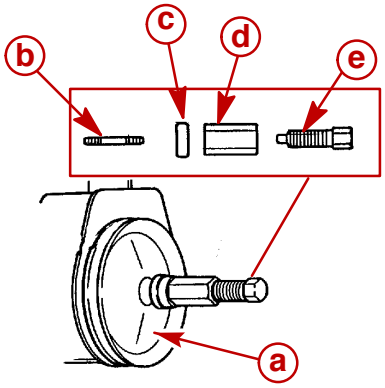

75751

Typical

a - Power Steering Pump Pulley
b - Stud
c - Bearing
d - Nut
e - Tool Shaft

Hydraulic Fluid Hoses

IMPORTANT: Make fluid connections as quickly as possible to prevent fluid leaks.

NOTE: *Catch fluid that drains from from hose, cooler and pump in a suitable container.*

High Pressure Hose (Pump-To-Control Valve)

REMOVAL

1. Remove high pressure hose pump fitting with O-ring from power steering pump.

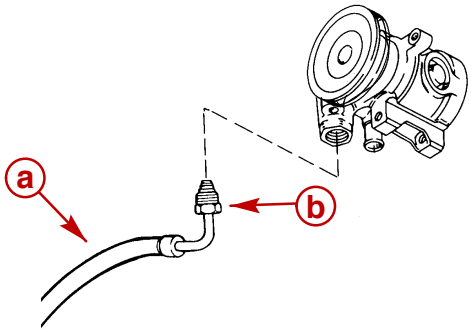

71035

a - High Pressure Hose
b - Pump Fitting

2. Remove high pressure fluid hose fitting from control valve.

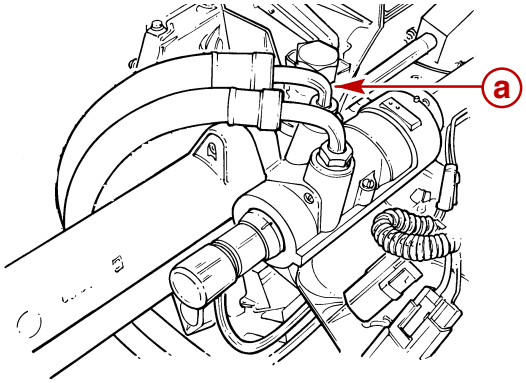

77759

a - Fluid Hose Fitting

3. Remove high pressure fluid hose.

INSTALLATION

⚠ CAUTION

Route hoses as shown. This will help avoid stress on the hose fittings and prevent kinks in hoses.

IMPORTANT: Be careful to not cross thread or overtighten hose fittings.

1. Thread high pressure fluid hose fitting into control valve. Position hose as shown below. Torque fitting.

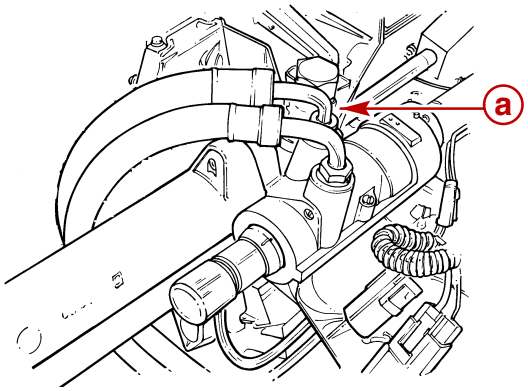

77759

a - Fluid Hose Fitting

Description		Nm	lb-in.	lb-ft
Fluid Hose Fittings	At Control Valve	31		23

2. Secure the hose to the engine with tie straps, if necessary.
3. Ensure that there is a new O-ring on the end of high pressure hose pump fitting.
4. Thread high pressure hose pump fitting into power steering pump. Torque fitting.

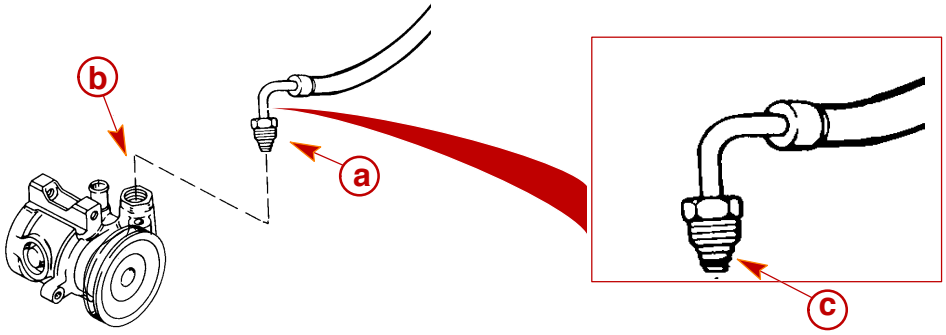

71035

a - Pump Hose Fitting
b - Fitting
c - O-ring

Description		Nm	lb-in.	lb-ft
Pump Hose Fitting	At Pump	31		23

Fluid Supply Hose

REMOVAL

NOTE: *Catch fluid that drains from from hose, cooler and pump in a suitable container.*

1. Loosen hose clamp and remove fluid supply hose from power steering pump.

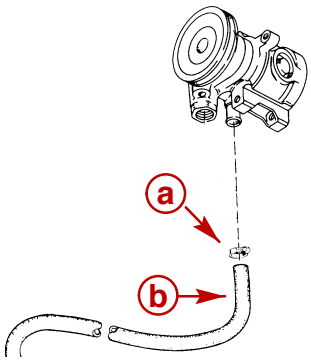

71035

a - Hose Clamp
b - Fluid Supply Hose

2. Drain power steering fluid into a suitable container.
3. Loosen hose clamp and remove fluid supply hose from fluid reservoir.

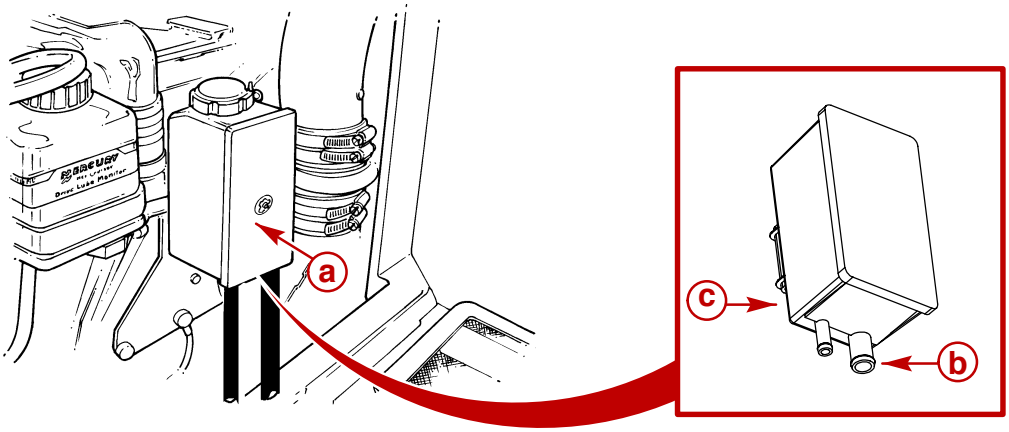

77322

a - Fluid Reservoir
b - Fluid Supply Hose (To Power Steering Pump)
c - Bottom View Of The Reservoir

4. Remove low pressure hose. Note routing.

INSTALLATION

1. Install the new hose at the power steering pump and the reservoir.
2. Tighten hose clamps securely.
3. FIll and air bleed system. Refer to SECTION 1B.

IMPORTANT: Make fluid connections as quickly as possible to prevent fluid leaks.

Low Pressure Hose (Control Valve To Fluid Cooler)

REMOVAL

1. Remove low pressure fluid hose from fluid cooler.
2. Remove low pressure fluid hose fitting from control valve.

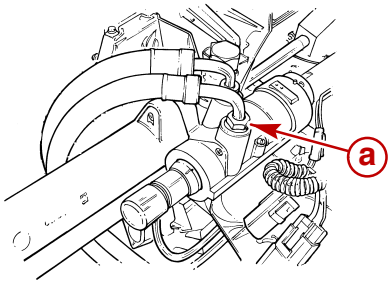

77759

a - Low Pressure Hose Fitting

3. Remove low pressure fluid hose.

INSTALLATION

⚠ CAUTION

Route hoses as shown. This will help avoid stress on the hose fittings and prevent kinks in hoses.

IMPORTANT: Be careful to not cross thread or overtighten hose fittings.

1. Install low pressure fluid hose fitting on fluid cooler. Tighten hose clamps securely.
2. Install low pressure fluid hose fitting in control valve. Torque fitting.

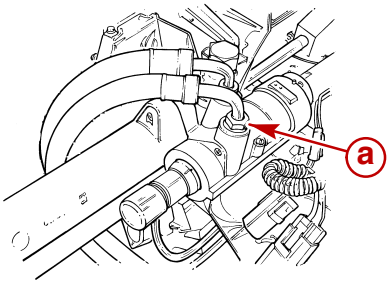

77759

a - Fluid Hose Fitting

Description		Nm	lb-in.	lb-ft
Fluid Hose Fittings	At Control Valve	31		23

3. Route low pressure fluid hose to fluid cooler. Tighten hose clamp securely.
4. Secure the hose to the engine with tie straps if necessary.
5. FIll and air bleed system. Refer to SECTION 1B.

Power Steering Fluid Cooler

Removal

1. Loosen hose clamps and remove the water hoses from the power steering fluid cooler.

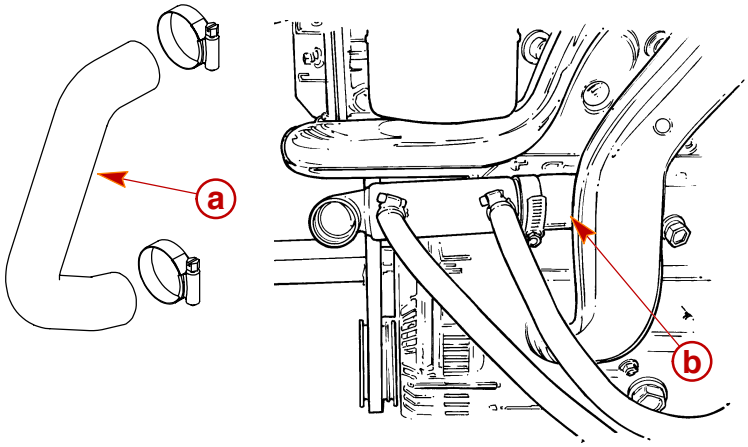

77768

a - Water Hose To Heat Exchanger Cover
b - Water Hose To Intercooler

2. Loosen hose clamps and remove the power steering fluid hoses.

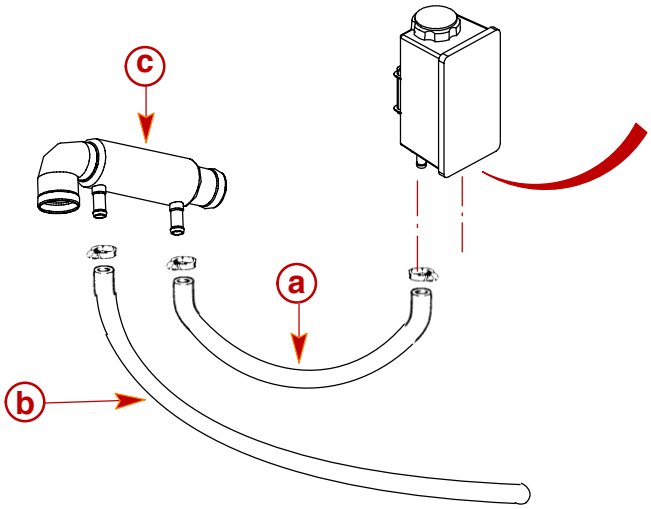

a - Return Hose To Fluid Reservoir
b - Low Pressure Fluid Hose
c - Power Steering Fluid Cooler

3. Drain the power steering fluid from the hoses into a suitable container.

Cleaning and Inspection

1. Inspect outer seams of power steering fluid cooler for corrosion, cracks and leaks.
2. Replace water hoses if damaged or worn.

Installation

1. Install fluid cooler onto intercooler hose. Tighten hose clamp securely.
2. Install water hose from fluid cooler to heat exchanger cover.
3. Install the power steering fluid return lines to the cooler. Tighten hose clamps securely.

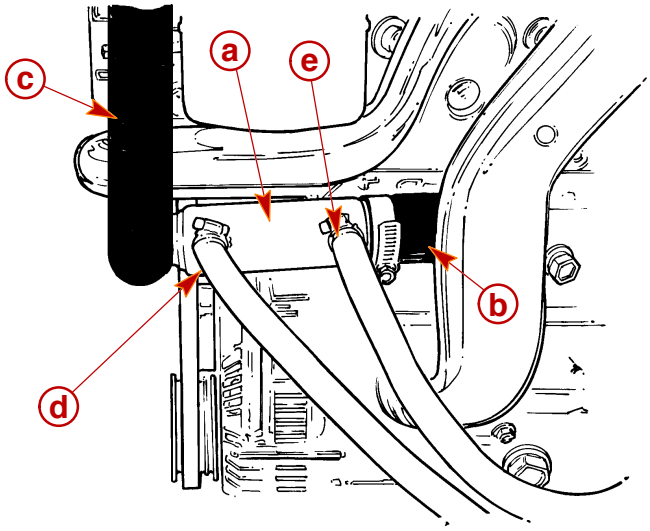

77768

a - Power Steering Cooler
b - Water Hose To Intercooler
c - Water Hose To Heat Exchanger Cover
d - Low Pressure Fluid Hose
e - Return Hose To Fluid Reservoir

4. FIll and air bleed system. Refer to SECTION 1B.
5. Supply cooling water to the engine. Start engine.
6. Inspect engine for water and power steering fluid leaks.

Pulley

1. Remove the power steering and serpentine belts.
2. Remove water circulating pump pulley.
3. Inspect the pulley for cracks, corrosion and out-of-round. Replace if needed.
4. Install belt pulley using bolts and lock washers. Temporarily hand tighten bolts.

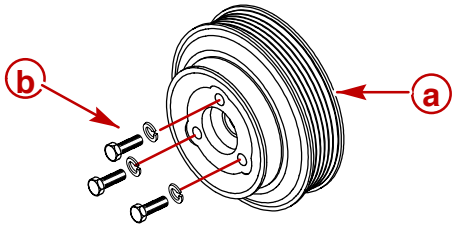

77735

a - Pulley
b - Bolt and Lock Washer

Description		Nm	lb-in.	lb-ft
Bolt, Drive Pulley	M6x1.0x30	14	124	

5. Install serpentine belt.
6. Counterhold pulley with belt and torque pulley bolts
7. Install power steering belt..

PUMP BELT

1. Remove existing pump belt.
2. Install and tension new belt. Belt deflection is 5 mm (3/16 in.).
3. Torque the brace upper bolt and lower bolt, and pump front mounting bolt.

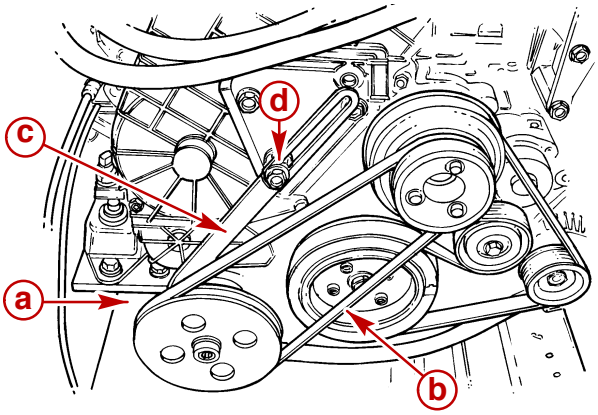

77321

a - Front Mounting Bolt
b - V-Belt
c - Brace
d - Brace Upper Bolt

Description		Nm	lb-in.	lb-ft
Bolt, Brace Upper	M10x1.5x40	34		25

THIS PAGE IS INTENTIONALLY BLANK

THIS PAGE IS INTENTIONALLY BLANK